NO. 80 NOTES FROM THE SHOP $3.95

Woodsmith®

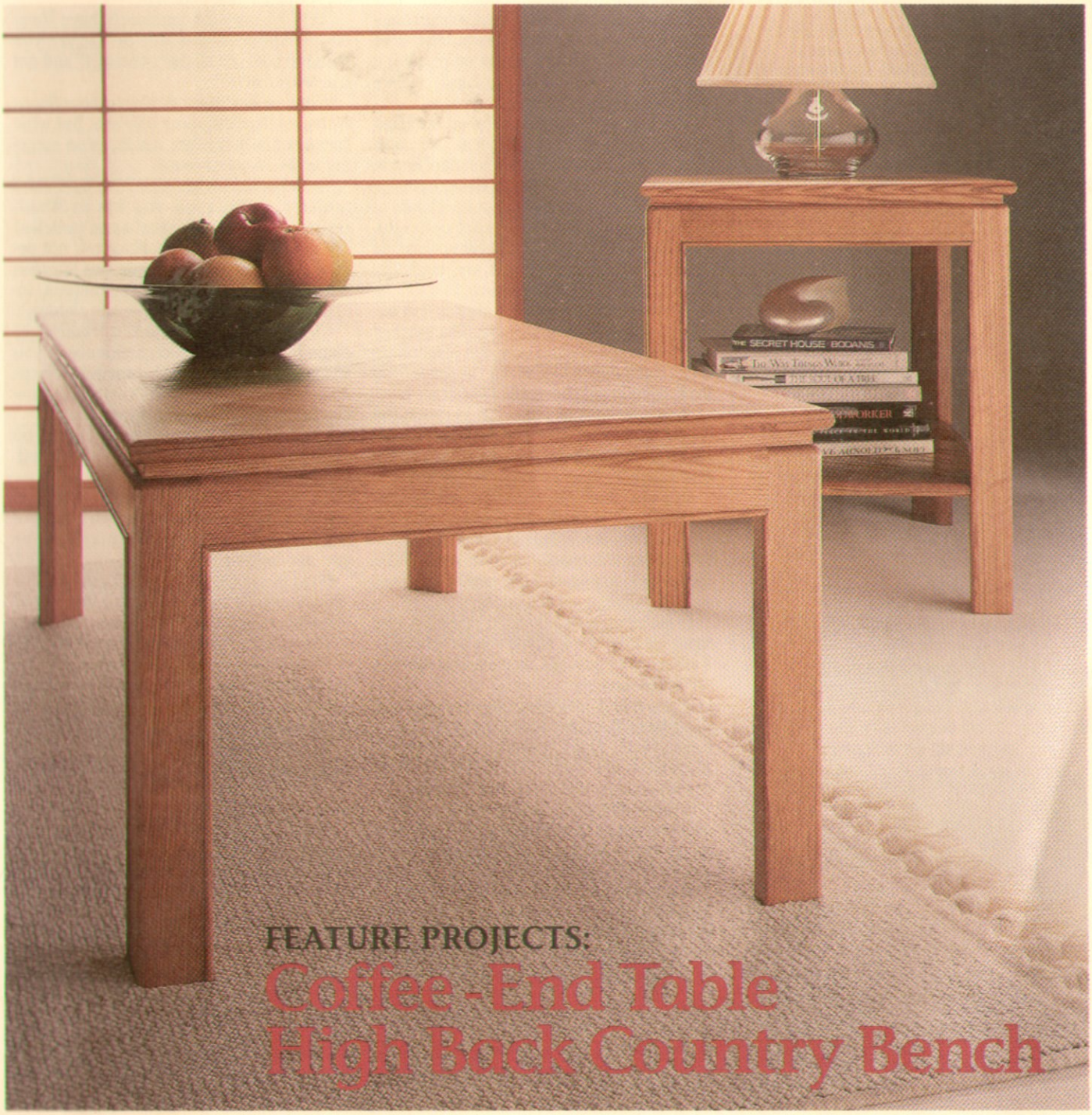

FEATURE PROJECTS:

Coffee-End Table
High Back Country Bench

No. 80 April, 1992

Woodsmith®

Editor Donald B. Peschke
Managing Editor Douglas L. Hicks
Assistant Editors James M. Dolan, Gordon Gaippe, Philip A. Totten

Creative Director Ted Kralicek
Assistant Art Director Rod Stoakes
Senior Illustrators David Kreyling, Chris Glowacki
Illustrators Dirk Ver Steeg, Cinda Shambaugh
Contributing Illustr. Robert H. Whitmer
Photographer Crayola England
Design Director Ken Munkel
Asst. Designer Jan Hale Svec
Shop Manager Steve Curtis

Circulation Director Liz Bredeson
Subscription Manager Sandy Baum
Circulation Analyst Jim Woodson
Newsstand Sales Kent A. Buckton

CORPORATE SERVICES
Controller Paul E. Gray
Accounting Linda O'Rourke
Bookkeeping Julianne Spears
Network Administrator Douglas M. Lidster
Administrative Asst. Cheryl A. Scott
Receptionist Lori Seibert
Building Maintenance Ken Griffith, Archie Krause

WOODSMITH SOURCEBOOK
Marketing Director Robert Murry
Art Director Cindy Jackson
Customer Service Mgr. Laura McNelly
Project Supplies Leslie Ann Gearhart, Linda Jones
Technical Support Jonathan Garbison
Advertising Jean Myers
Systems Operator Linda Morrow
Receptionist Keri Lee

CUSTOMER SERVICE
Jennie Enos (Supervisor), Joy Johnson, Marci Nelson, Doug Neathery, Jeff Janes, Sara Johnson, Chris Lo

SHIPPING DEPARTMENT
Jerry Carson (Supervisor), Gloria Sheehan, Ronald Long, Donnie McVey, Chuck Carlson

STORE MANAGERS
Des Moines, IA Kent Welsh
Berkeley, CA Michael DeHaven

Woodsmith® (ISSN 0164-4114) is published bimonthly (Feb., April, June, Aug., Oct., Dec.) by Woodsmith Corporation, 2200 Grand Ave., Des Moines, IA 50312. Printed in U.S.A.
Woodsmith® is a registered trademark of Woodsmith Corp.
Copyright© **1992** Woodsmith Corporation. All rights reserved.
Subscriptions: Single copy: $3.95. One year subscription (6 issues), $17.95. Two years (12 issues), $31.95. (Canada/Foreign $21.95 per year, U.S. funds.)
Second Class Postage Paid at Des Moines, IA and at additional offices.
Postmaster: Send change of address to *Woodsmith*, Box 10718, Des Moines, IA 50350.
Subscription Questions? Call 1-800-333-5075, 8:00 am to 5:00 pm, Central Time, weekdays.

EDITOR'S COLUMN

Sawdust

Have you ever started thinking about something and your thoughts take a strange turn or two? As I was experimenting with the milk paint finish for the High Back Bench in this issue, I began to think about the meaning of quality.

In woodworking, we strive for craftsmanship. It means quality of work. Often, we think of craftsmanship when we're talking about an old way of doing things, "They don't make things like that anymore."

The idea of using milk paint on the High Back Bench was an effort to learn about an old method of work. But as I was applying it, my thinking began to take a strange turn.

I was trying to put on a "perfect" coat of paint. But I realized that it didn't look right. It would be better if it looked a little worn. So I roughed it up, scratched it, and made the surface look scuffed and worn.

What struck me was that my view of quality changed so dramatically. The original "perfect" coat of paint was one kind of quality. But I didn't like it. To "improve" the look, I produced the scuffed version.

That's an odd process. To improve the quality, you scuff up a coat of paint. Which makes it look old. Which gives it more of a feel of quality than if it were brand new.

In a way, it all has to do with our perceptions of quality. Yet, it also has to do with our goals. In woodworking, one goal is to strive to improve the quality of what we do. The key here is to *improve* the quality, not necessarily achieve *perfect* quality.

In fact, maybe we shouldn't view a craftsman as one who achieves perfection. Rather, a craftsman is one who always strives to improve.

At any rate, I felt better about things when I had these thoughts. In someway it took the pressure off. And I began to think that improvement is a better goal than perfection, and it's a better definition of craftsmanship.

COLOR. Along the lines of quality and improvement, we've received lots of comments concerning the use of color in *Woodsmith*. By far, most people like it.

I'm happy with the addition of color because it gives a better idea of what the projects actually look like. And it allows us to produce articles that are dependent on color, like the one on milk paint.

SHOPNOTES. At the same time we were adding color to *Woodsmith*, we made a another big addition . . . *ShopNotes*, our new magazine devoted to the shop. And with it came letters of praise, thanks — and some expressing a little concern.

"Will *Woodsmith* continue to have shop-oriented projects and articles? Or, are you going to take out all the 'good stuff' and put it in *ShopNotes*?"

When we first started talking about *ShopNotes*, we had the same concern. But what happened is that when you focus on something, the ideas increase.

We will absolutely continue to have shop projects, techniques, and tips in *Woodsmith*. In fact, the amount of space (articles) devoted to this will probably grow, not decline. (This issue, for example, has 13 pages devoted to woodworking techniques, including four pages on shop-made clamps.)

"Some time ago I became a *Woodsmith* convert and I developed confidence in you and your staff. But I'm concerned that *ShopNotes* might be just a rehash of the information in the back issues of *Woodsmith*."

I understand your concern. But to be quite honest, we would be foolish to do that. *ShopNotes* is not (and never will be) a rehash of old material. It has new ideas, new presentation, it even has its own staff. We are, in effect, competing with ourselves for new and better ideas.

"I'm concerned that if I don't subscribe to *ShopNotes*, I'll miss something that would have been mentioned in *Woodsmith*."

You won't miss anything that *should* be in *Woodsmith*. The two magazines will not be cross-referenced. But you will miss more information about the shop. That's the point behind *ShopNotes* . . . *more* information.

The bottom line is this. We can't get everything in *Woodsmith*. But if you want more information about your shop, give *ShopNotes* a try.

If you subscribe and decide that you don't like *ShopNotes*, for any reason or no reason at all, write us, or call us toll free (1-800-333-5075) and we send you a 100% refund. No questions asked.

But, I think you'll like *ShopNotes*. And I think *Woodsmith* will be even better in future, too. You get the best of both worlds.

Don

A LOOK INSIDE

Contents

Tips & Techniques 4 *1) Center Marker. 2) Widening Dadoes. 3) Inlay Strip Bevel Jig. 4) Indexing Jig. Also, Bit Holders.*

Coffee Table 6 *This table features an interesting way to join the aprons to the legs with a "built-up" half lap joint.*

End Table 12 *Build this End Table as one of a pair, or to complement the Coffee Table. It has the same straightforward joinery, with a shelf added.*

Sharpening 14 *A sharp tool means a clean, fast cut. We show how to sharpen an edge in just five minutes.*

Shop Notes 16 *1) Cutting Panels at a Diagonal. 2) Dealing with Wood Movement. 3) Shop-Made Edge Guide.*

High Back Bench 18 *This bench is a classic country project, with simple joinery and attractive lines. Use knotty pine and stain it. Or antique it with milk paint.*

Milk Paint 24 *Milk paint gives a project an aged, country look. We show techniques for achieving several authentic effects.*

Shop-Made Clamps 26 *Four pages of great ideas from the shops of our readers.*

Talking Shop 30 *A new question answered, and an earlier answer clarified. 1) 115 or 230 Volts? 2) More on WD-40.*

Sources 31 *Hardware and project supplies needed for the projects in this issue.*

Coffee Table *page 6*

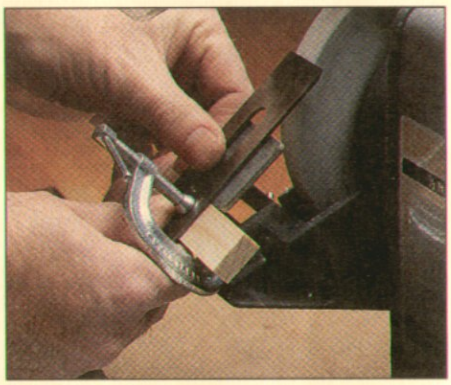

Sharpening *page 14*

High Back Bench *page 18*

Milk Paint *page 24*

Tips & Techniques

CENTER MARKER

■ Locating the center of the edge of a workpiece is fast and accurate with a center marking jig. But rather than buy one, I made my own. It consists of a block of wood, a pencil, and two dowels which act as guides.

To build it, I began by gluing the ¼" dowels into holes drilled along the centerline of the block, see Fig. 1.

Next comes the tricky part. For the jig to be accurate, the hole for the pencil must be exactly on the centerline, and dead center between the two dowels.

To find the mid-point between the dowels, place a ruler diagonally across the block so it's touching both dowels, see Fig. 2. Now draw a line along the top and bottom edges of the ruler.

Next, re-position the ruler diagonally the other way, and draw two more lines. This second set of lines will intersect the first set, see Fig. 3.

By connecting the intersections, you will cross the centerline at a point dead center between the dowels, see Fig. 3.

Now drill the hole for a pencil at the centerpoint. Size the hole so the pencil fits snugly. If the pencil is loose, wrap it with tape.

To use the center marker, insert a pencil and place the jig over the workpiece with one dowel on each side, see Fig. 4. With the dowels tight against the sides, draw a centerline on the edge of the workpiece.

Karl Hakmiller
Manchester, Connecticut

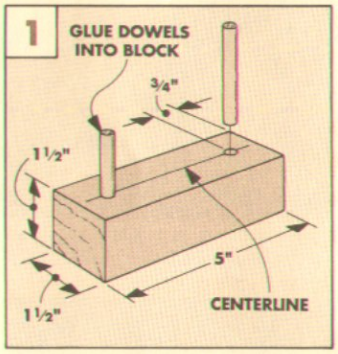

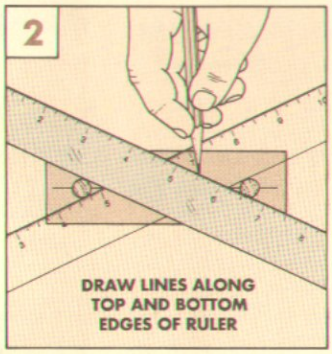

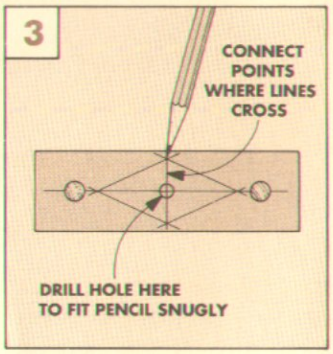

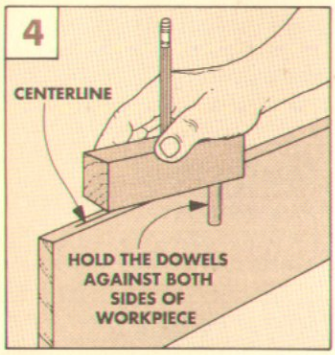

WIDENING DADOES

■ The problem with using ¾" hardwood plywood for shelves is that it isn't exactly ¾" thick — it's usually less. If you use a ¾" straight router bit to rout dadoes for the plywood, the shelves will be a loose fit.

To get around this problem, you can rout the dadoes in two passes using a ½" bit, moving the guide fence after the first pass. But I found a way to do it without moving the fence.

To do this, I make a spacer that's slightly less than ¼"-thick. (The combined thickness of the router bit and the spacer should equal the thickness of the ¾" hardwood plywood.) Then I place it between the edge of the router base and the fence and make a pass, see Fig. 1. Now remove the spacer to make the second pass, see Fig. 2.

Joseph Murzyn
Schererville, Indiana

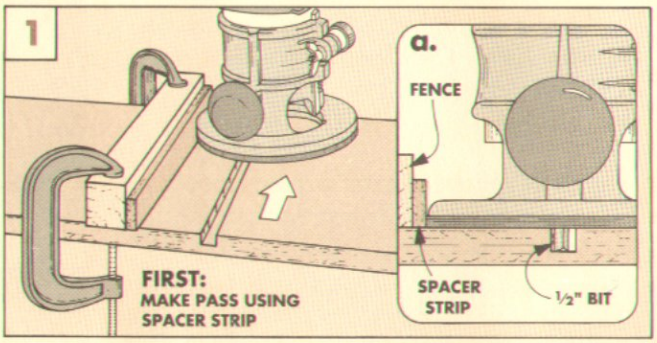

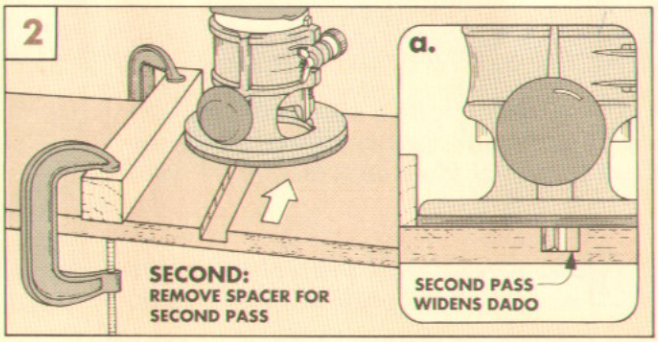

BIT HOLDER

To protect my router bits from knicks and rust, I store them in plastic coin tubes. These tubes are the type used by collectors to store rolls of coins, so they come in many sizes (see photo). And since they're clear, you can tell at a glance what's inside.

Coin tubes are available at hobby stores and coin shops. They cost 25 to 50 cents, depending on size.

William R. Shaffer
Hagerstown, Maryland

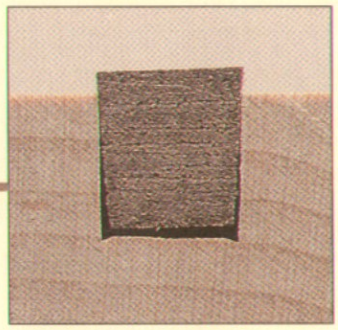

INLAY STRIP BEVEL JIG

■ Gluing inlay strips into narrow grooves can be difficult if the thickness of the inlay stock isn't exactly the same as the width of the groove. To make the fitting job easier, I slightly bevel the edges of the inlay strips. Then the strips will wedge in for a tight fit where they show — at the top of the groove, see photo at right.

To produce the beveled angles on such a small strip, I made a simple jig for the router table.

To build the jig, take a squared up 2x4 and rip a ½"-thick strip off one edge, see Step 1, Fig. 2. (Save the strip.)

Next, cut a groove for the inlay stock in the jig, see Step 2. Size the groove so the inlay stock fits snugly. Otherwise the stock will be hard to bevel evenly. Now glue the ½" strip back on the 2x4 to cover the groove.

Next, rip a 2° bevel along the bottom edge of the strip, see Step 3, Fig. 2. Finally, cut a 2"-wide notch centered on the length of the jig as clearance for the router bit, see Step 4, Fig. 2.

Using the jig is easy — the only tricky part is aligning it with the router bit. To do this, first slide a test piece in the enclosed groove, see Fig. 1. Now clamp the jig on the router table so the bottom corner of the test piece just touches the bit.

Next, make a test cut and check the bevel. Then sneak up on the proper setting until the top corner of the inlay stock just touches the router bit, see Fig. 3.

Once the jig is set, feed the inlay stock from left to right behind the bit. Then turn it around and bevel the other side.

Thad Dieter
Oklahoma City, Oklahoma

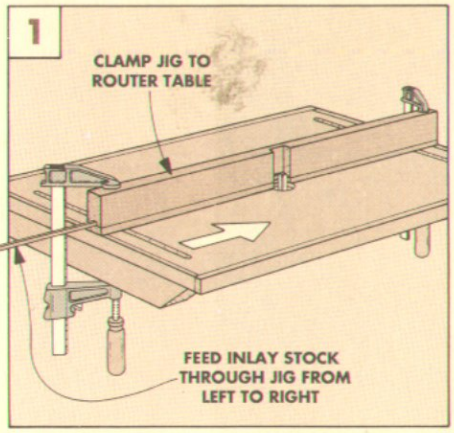

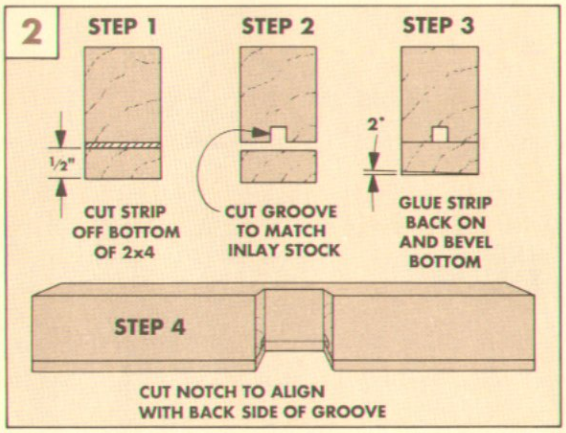

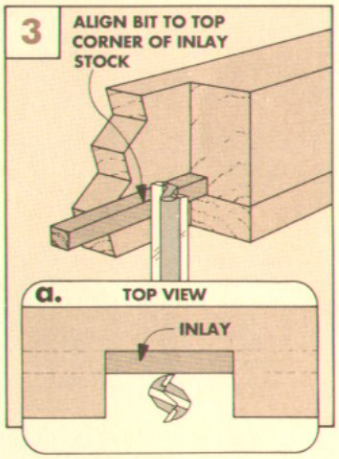

INDEXING JIG

■ Here's an indexing jig that I use to drill evenly spaced holes for shelf supports. The jig has two shoulders, a dowel, and a hole for the drill bit, see Fig. 1. The shoulders determine how far in from the edge of the workpiece the holes are drilled. And the peg controls the spacing between holes.

To make this jig, first cut a centered groove in a block of wood and glue in a small piece of plywood, see Fig. 2. Then drill two holes through the plywood. Locate the holes the same distance apart and from the shoulder of the jig as you want the holes in the workpiece, see Fig. 1. Now glue a dowel into one hole so it sticks out both sides.

To use the jig, first drill the top hole in the workpiece. Then, place the dowel in the hole just drilled. Now drill the next hole through the open hole in the jig.

John W. Glessner
USAF Academy, Colorado

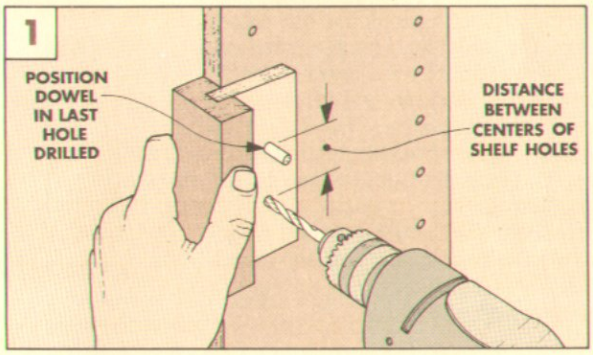

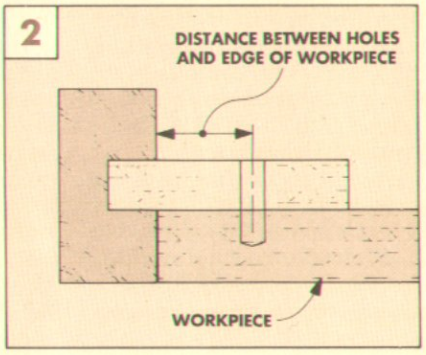

SEND IN YOUR TIPS

If you would like to share a tip or idea, just send it to *Woodsmith*, Tips and Techniques, 2200 Grand Ave., Des Moines, Iowa 50312.

We will pay (upon publication) $15 to $100, depending on the published length of the tip. Please include an explanation and a photo or sketch (we'll draw a new one).

Coffee Table

This Coffee Table looks like it's built with heavy posts for legs, and mortise and tenon joints. But rabbets and half-lap joints look — and work — the same. They're just easier to cut.

When I built this Coffee Table, I did something different with the legs. Traditionally, table legs are square posts connected by stretchers with mortise and tenon joinery. Solid construction. The base on this table is solid, too — it just doesn't involve square posts or cutting mortises and tenons.

BUILT-UP LEGS. The legs are built up from ¾"-thick oak. But they're not put together the way you might think. First, two pieces are glued together to form an outside corner. Then a third piece is beveled to fit behind the inside corner. This creates a triangular leg.

But the beveled piece isn't just to give the leg a triangular shape. It's there to "trap" a half lap on the end of the table aprons. The half lap acts like a tenon that fits inside a built-up "mortise." Which gives the table strength, and the appearance of a piece made with traditional joinery.

GRAIN DIRECTION. One thing to consider when making built-up legs is the wood grain. To achieve the look of a one-piece leg, it's important to select the mating pieces of each leg from the same section of stock, see Cutting Diagram on facing page. Then, when the corner is rounded over, the color and grain direction make the built-up leg look like one piece.

THE TOP. The table top is made up of three sections of plywood cut from a larger sheet. To make the top more interesting, I cut the panel so the grain runs diagonally. This way, when the panels are mounted inside the frame, the grain direction alternates from one panel to the other, see photo above.

The procedure for cutting plywood diagonally, and also for routing half laps and roundovers with a special router jig, is covered in Shop Notes on pages 16 and 17.

EXPLODED VIEW

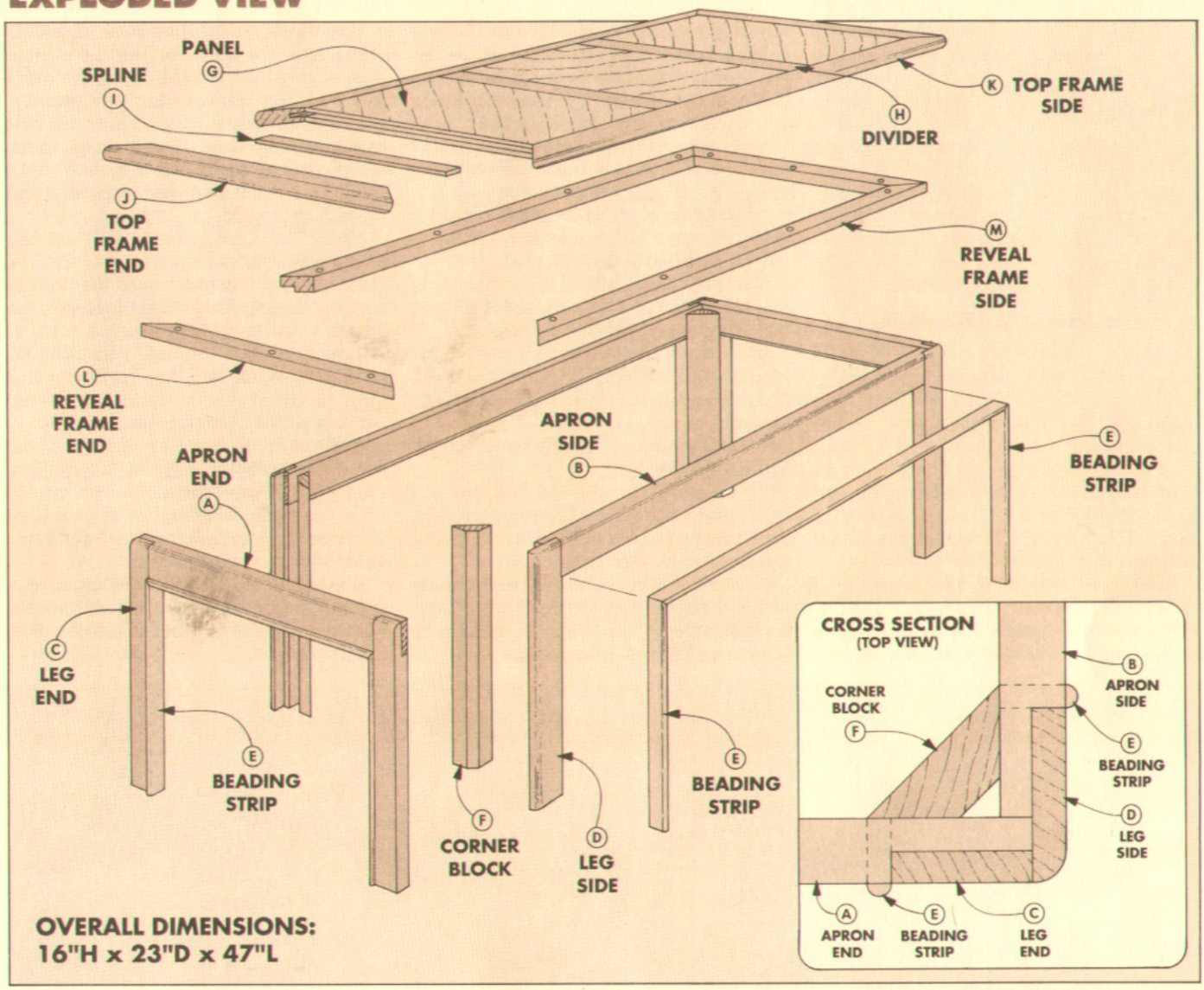

OVERALL DIMENSIONS:
16"H x 23"D x 47"L

MATERIALS

TABLE BASE

A	Apron - Ends (2)	3/4 x 2 - 21 3/4
B	Apron - Sides (2)	3/4 x 2 - 45 3/4
C	Leg - Ends (4)	3/4 x 1 5/8 - 15
D	Leg - Sides (4)	3/4 x 2 - 15
E	Beading Strips	1/4 x 7/8 - 26' rgh
F	Corner Blocks (4)	3/4 x 2 3/16 - 14 3/4

TABLE TOP

G	Panels (3)	3/4 ply - 13 x 19
H	Dividers (2)	3/4 x 2 - 19
I	Splines	1/4 x 15/16 - cut to fit
J	Frame Ends (2)	3/4 x 2 - 23
K	Frame Sides (2)	3/4 x 2 - 47
L	Reveal - Ends (2)	3/4 x 1 3/8 - 23 rgh
M	Reveal - Sides (2)	3/4 x 1 3/8 - 47 rgh

SUPPLIES

- (14) #8 x 1 1/4" Fh Woodscrews
- General Finishes' Two-Step System

CUTTING DIAGRAM

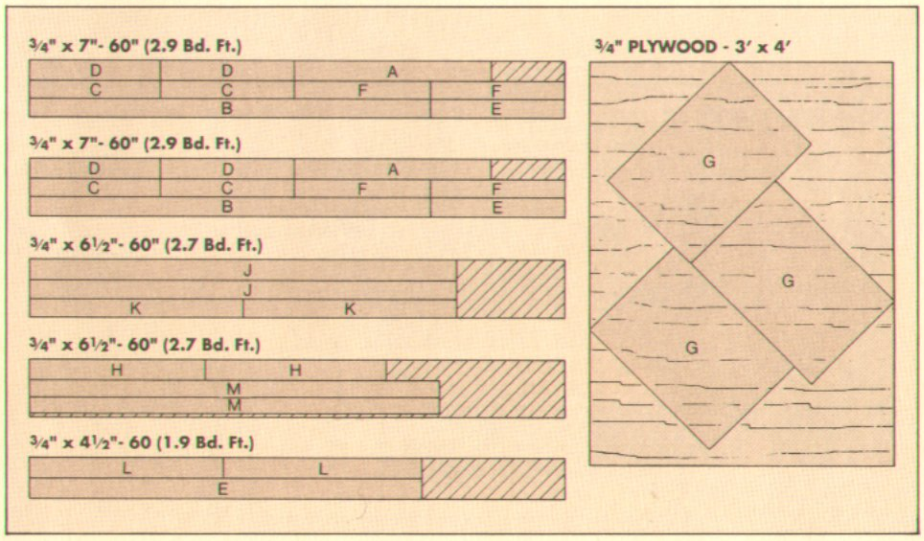

TABLE BASE

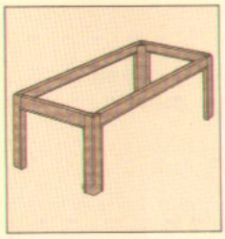

There are two main parts to the Coffee Table — the table base and the top. I built the base first, then made the top to fit. But instead of starting out by building four legs and connecting them with aprons, I did something different — and easier. I began by building four "U-shaped" assemblies.

BEGINNING THE BASE

The first step is to build a pair of "U-shaped" assemblies for the ends of the base, see Fig. 1. Then a longer pair of assemblies for the sides, see Fig. 2. Finally, the assemblies are glued together to form the base, see Fig. 4.

APRONS. To begin, first rip two **apron ends (A)** and two **apron sides (B)** to the same width (2") from ¾" stock, see Figs. 1 and 2. Then trim all four aprons to finished lengths (21¾" and 45¾").

COLOR & GRAIN. Now the legs can be added to the aprons to complete the four "U-shaped" assemblies. The legs (C) for the end assemblies will later be joined to the legs (D) for the side assemblies. So for the best color and grain match when the assemblies are joined, it's important to cut the mating pieces (C & D) from the same section of stock, refer to the Cutting Diagram.

Shop Note: It helps to mark the mating pieces so they can be assembled into the same leg unit later.

LEGS. All eight leg pieces are cut from ¾" stock. First, cut four blanks to rough width (4") and finished length (15").

Next, rip these four blanks to produce four **leg ends (C)** 1⅝" wide, see Fig. 1, and four **leg sides (D)** 2" wide, see Fig. 2.

HALF LAPS. The legs are joined to the aprons by means of half-lap joints. These half laps *can* be cut with a dado blade on the table saw. But to end up with the cleanest cuts possible, I cut the half laps with a straight bit in the router instead.

To make routing the half laps easier, I used a shop-made edge guide for the router. (For information on how to build and use this jig, see Shop Notes, page 17.)

Note: Half laps are cut *half* the thickness of the mating pieces — in my case ⅜" deep.

Using an edge guide to rout half laps involves two different fence setups.

First, the laps on the top of the leg pieces are routed 2" wide (to accept the 2"-wide aprons), see Figs. 1 and 2. Then, 1⅝"-wide laps are routed on the ends of each apron.

U-SHAPED ASSEMBLIES. When the half laps have been cut on all twelve base pieces, the pieces can be glued up into four U-shaped assemblies (two end assemblies and two side assemblies).

Note: The apron sides will *not* lap completely over the leg sides, see Fig. 2a. This isn't a problem because the outside edges of the leg sides — and the ends of the aprons — will be rabbeted next.

RABBETS. When the four U-shaped leg assemblies are complete, they can be joined to form the table base. This is done by cutting a rabbet joint at all four corners.

Rabbets are cut *only* on the legs of the side assemblies — not the end assemblies, see Fig. 3. Because the rabbets are cut ¾" wide (the same width as the thickness of your stock), I again used the shop-built edge guide with the router, see Fig. 3.

ASSEMBLY. When the rabbets have been cut on the side assemblies, all four assemblies can be glued together to form the table base, see Fig. 4.

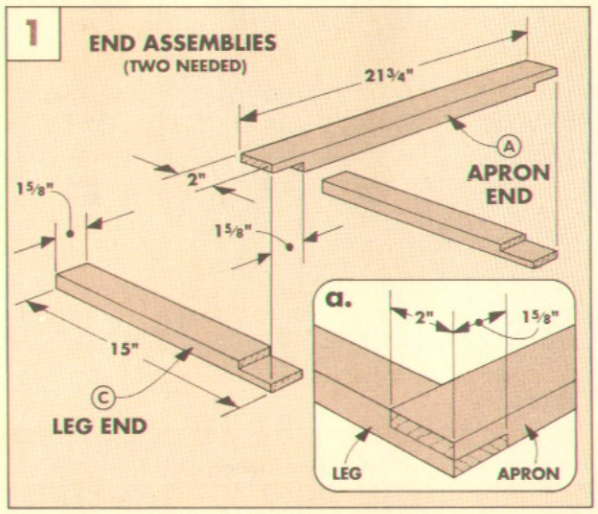

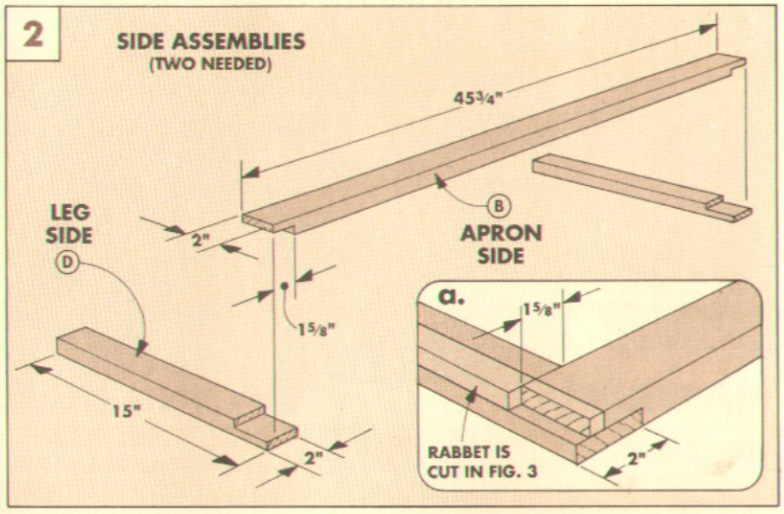

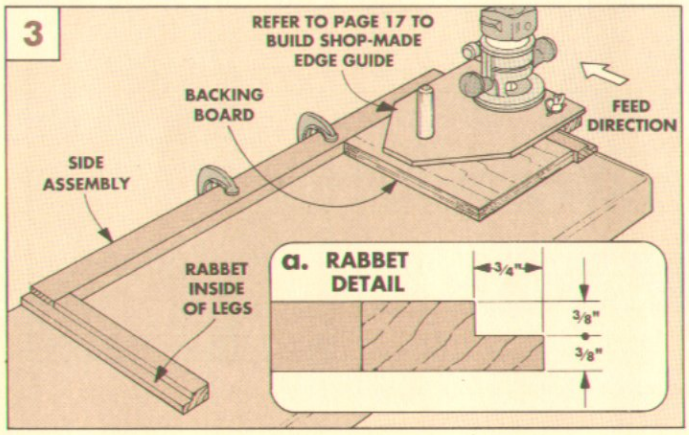

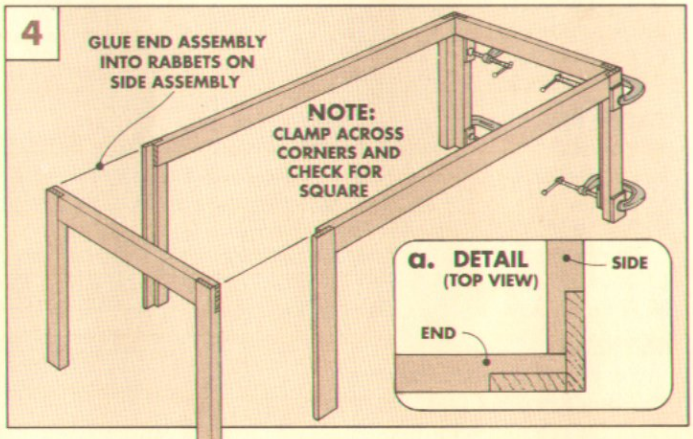

CONTINUED

After the table legs and aprons are assembled, there are three more operations before beginning the table top. First, the legs and aprons are rounded over. Then, edge beading strips are cut and glued to the legs and aprons. Finally, corner blocks are cut and attached to fill in behind each leg and give the legs a triangular shape.

COMPLETING THE BASE

To help the leg pieces blend together (and look more like a one-piece leg), I rounded over the *outside corners* of the side legs, see Figs. 5 and 5a. Then, to create a smooth transition between the base and the top, I also rounded over the top *outside edge* of each apron, see Fig. 5.

EDGE BEADING. After the legs and aprons are rounded over, beading strips are attached to the inside edges of the legs to soften the look. The **beading strips (E)** start out as 2"-wide blanks of ¾"-thick stock.

Cut two of these blanks to a rough length of 14" for the table legs. (You'll get four strips from each of these blanks.) Then cut another blank to a rough length of 42" for the end and side aprons. (You'll only need two strips from this blank.)

Now turn the blanks on edge and resaw them to produce ¼"-thick strips (2" wide). Both edges of these strips are rounded over on the router table with a ⅛" round-over bit, see Fig. 6a. Then the strips are ripped to produce the final width of ⅞", see Fig. 6a.

ATTACH EDGE BEADING. To mount the beading strips, first miter one end of each *short* beading strip to fit on the inside edge of each leg, see Fig. 6. Then glue the strip in place so the square edge is flush to the back of the leg. (The rounded front edge should stick out ⅛".)

Finally, miter both ends of the *long* beading strips, sneaking up on the length to fit between the upright beading strips. Then glue them to the bottom edge of the aprons, see Fig. 6.

CORNER BLOCKS. To complete the legs, I cut **corner blocks (F)** to give the legs their triangular shape. To make these blocks, first cut four pieces of ¾" stock to a rough width of 2½". Then cut the blocks to length — ¼" *shorter* than the table legs, see Fig. 8.

Now the corner blocks can be beveled to fit in the back corner of each leg assembly, see Fig. 8. The procedure I used was to rip a 45° bevel along one edge, see Fig. 7. Then rip another bevel on the opposite edge. Sneak up on the final width until the triangular block fits in the back corner of the leg, see Fig. 8a. (Also see tip above.)

ATTACH CORNER BLOCKS. Now the corner blocks can be glued in behind the legs, see Fig. 8. To do this, I used small scraps inside the leg, and a clamping strip with a V-groove on the outside, see Fig. 8a.

SHOP TIP

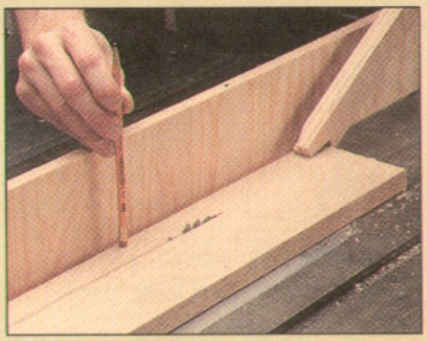

Bevel-ripping both edges of a narrow workpiece using the table saw is a delicate operation. To make this safer, I use a narrow shop-made push stick, and the eraser end of a pencil as a hold-down.

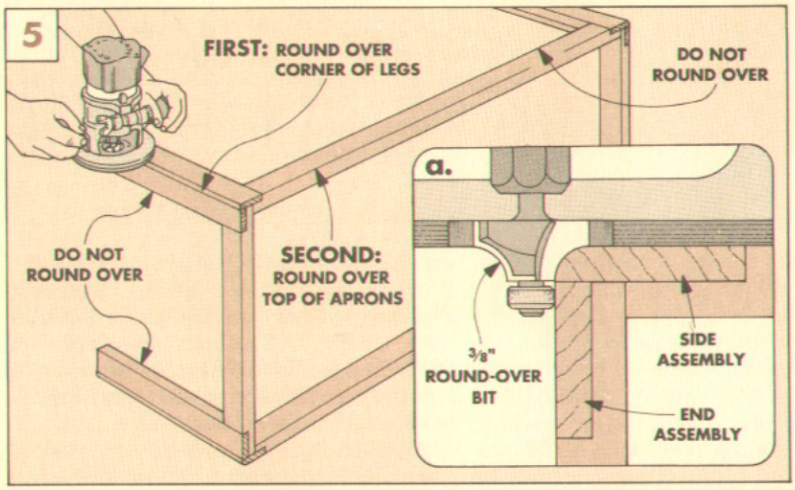

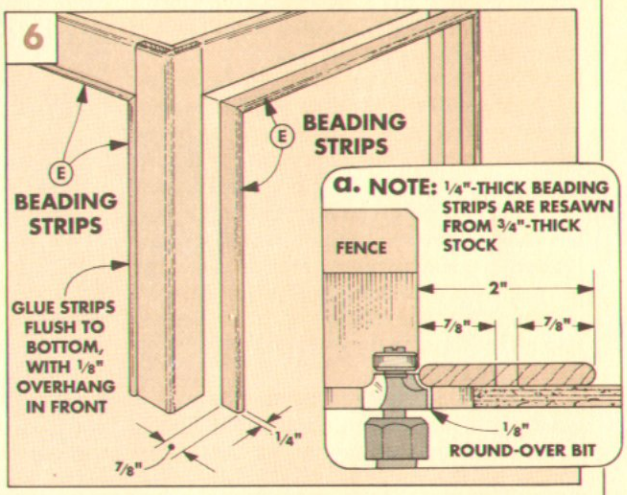

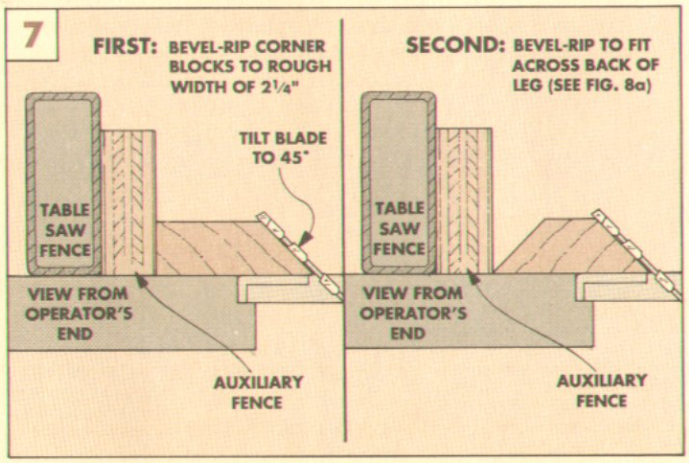

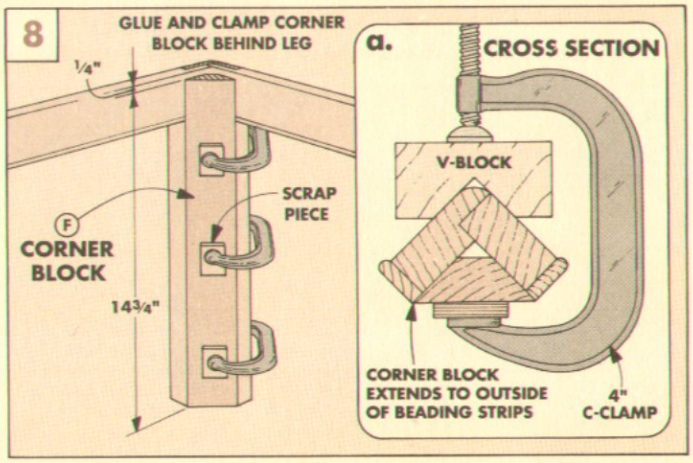

TABLE TOP

Once the table base is assembled, work can begin on the table top. The top consists of three plywood panels and two dividers surrounded by an oak frame. The parts are joined with spline and groove joints.

BEGINNING THE TOP

The panels for the top can be cut from less than half a sheet (4'x4') of hardwood plywood, see the Cutting Diagram on page 7.

PLYWOOD PANELS. To make the top more interesting to look at, I cut the panels with the grain oriented 45° to the outside frame. (The technique for cutting the angled panels is described in Shop Notes on page 16.)

Get started by cutting each of the three **top panels (G)** 13" wide and 19½" long, see Fig. 9. This is *longer* than finished length (19") to allow for trimming the uneven edges after the panels are assembled, see Fig. 11.

PANEL DIVIDERS. After the panels have been cut to rough size, the next step is to cut two **panel dividers (H)**. The dividers are ripped from ¾"-thick hardwood to a width of 2", and crosscut to the same length as the plywood (19½"), see Fig. 9.

INSIDE SLOTS. Now slots can be cut on both edges of the dividers and the panels, see Fig. 10. I used a ¼" slot cutter in the router to cut the slots, and centered the slots on the thickness of the dividers, see Fig. 10a.

The important thing here is that all slots are cut with the router riding on the *top* side of each piece. The reason for this is that the dividers and plywood panels probably won't be the exact same thickness. But by indexing off the top side they will all be flush with the top, see Fig. 10b.

MARKING. So I marked the top side of each piece in advance, then always routed with the marked face up, see Fig. 10. Note: Once you've got the router adjusted for this, don't change the set-up — you'll need it later.

SPLINES. Next, cut the splines for attaching the panels to the dividers (and also the outside frame). I made the **splines (I)** from ¼"-thick Masonite. To allow for easier assembly in the two ½"-wide slots, rip the splines to a width of 15/16", see Fig. 10b.

You'll need six splines 20" long for the long edges of the plywood panels. Later, you'll use two splines 43" long for attaching the long outside frame sections. So it's easiest to cut all the splines at one time from the end of a 4'-wide sheet.

ASSEMBLY. When the slots have been routed on the dividers and panels, the pieces can be glued together as a unit, see Fig. 9.

After the assembly is dry, trim it to finished width in two passes on the table saw, see Fig. 11. The first cut gives you one straight edge. Turn the piece around for the second cut. This cut produces the finished width, and another straight edge.

OUTSIDE SLOTS. Now slots are cut along the outside edges for attaching the outside frame, see Fig. 12. Again, I cut these slots with the router and a slot cutter adjusted as before, see Fig. 10a.

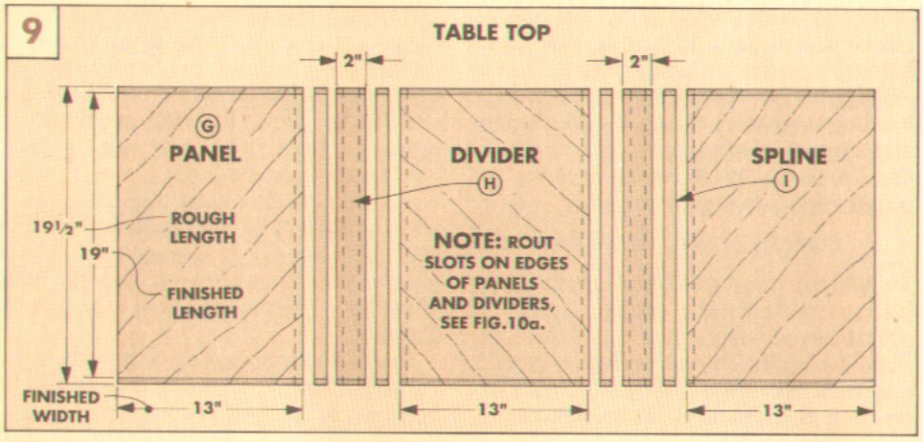

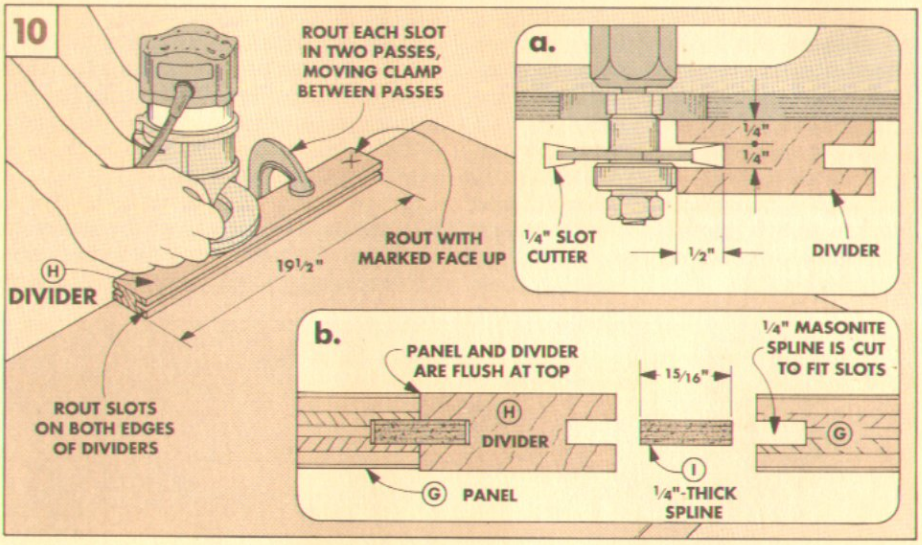

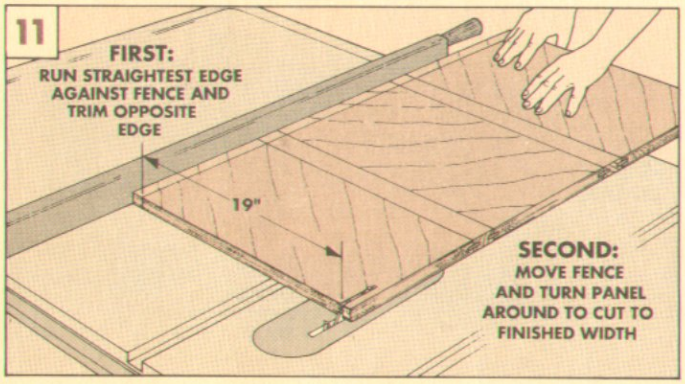

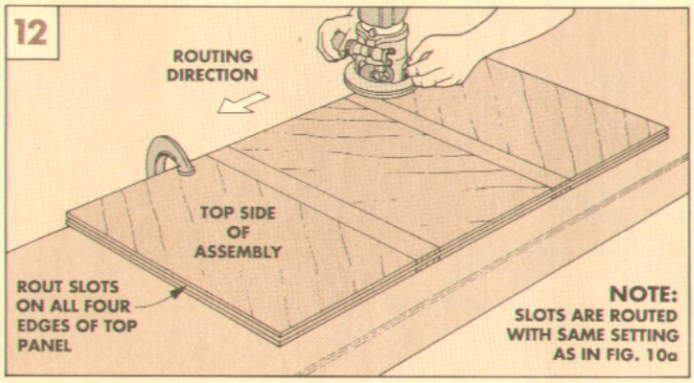

CONTINUED

There are just a few more steps to complete the table. First, the top is surrounded by a hardwood frame. Then a "reveal" frame is made for attaching the top to the base.

COMPLETING THE TOP

The mitered frame around the plywood top hides the edges of the plywood panels. It's attached to the edges of the plywood with splines glued into grooves, see Fig. 13.

TOP FRAME. To make the frame, start by ripping two pieces for the **frame ends (J)** and two **frame sides (K)** the same width as the panel dividers (2" wide), see Fig. 13.

Now miter both ends of each piece so the finished length (long-point to long-point) equals the distance along the plywood edge *plus* the width of two frame pieces (4").

Next, rout a groove on the inside edge of each frame piece to align with the groove around the plywood assembly. Then glue splines into the grooves, and glue the frame pieces onto the splines, see Fig. 13.

ROUND OVER EDGES. Before attaching the top to the table base, soften both the top and bottom edges of the frame with a 3/8" round-over bit, see Fig. 14.

Shop Note: I used an edge guide to rout the round-overs. There's a reason for this—the fence on the edge guide keeps the bit cutting uniform round-overs on the top and bottom edges of the frame, see Fig. 14a. Without the fence, the router bit would cut deeper on the second pass, since some of the surface the pilot bearing runs against is removed on the *first* pass.

REVEAL FRAME. The next step is to build the reveal frame that "lifts" the table top from the base, see Fig. 15. To do this, first rip the **reveal frame ends (L)** and **sides (M)** to finished width (1 3/8") and rough length from 3/4" stock, see Fig. 15.

Next, cut an 11/32"-wide rabbet on the lower outside edge of each frame section to fit on the top edge of the aprons, see Fig. 15a.

Now miter the pieces to finished length so they're 1 1/16" longer than the *inside* dimensions of the top of the table base, see Fig. 15a.

Before gluing the reveal frame to the base, I drilled a series of 3/16" countersunk holes in each frame section for attaching the top.

SCREW TOP TO REVEAL FRAME. Once the reveal frame sections are glued in place, turn the table top upside down on a flat surface to attach the top to the base, see Fig. 16. (Center the base on the top.)

Then, drill 1/8" pilot holes into the underside of the top frame through the holes in the reveal frame. Now screw the leg assembly to the top, see Fig. 16a.

FINISH. To even out the color between the oak plywood and the solid oak, I lightly stained the entire table with a custom-made stain. Then I covered this with several coats of General Finishes (see Sources, page 31).

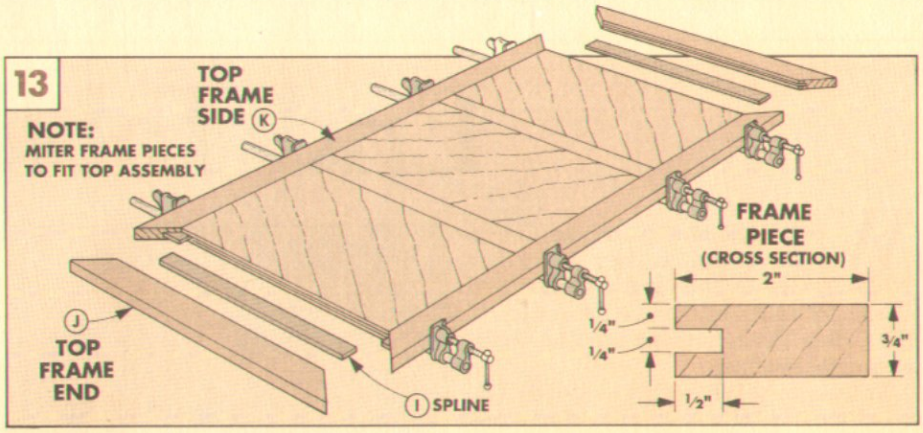

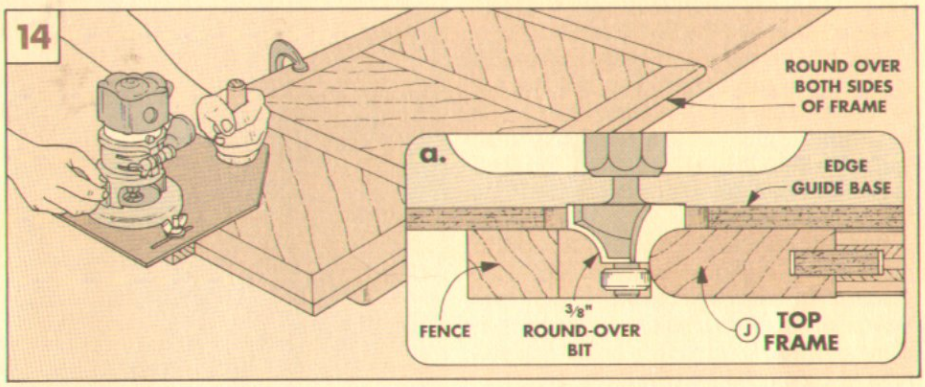

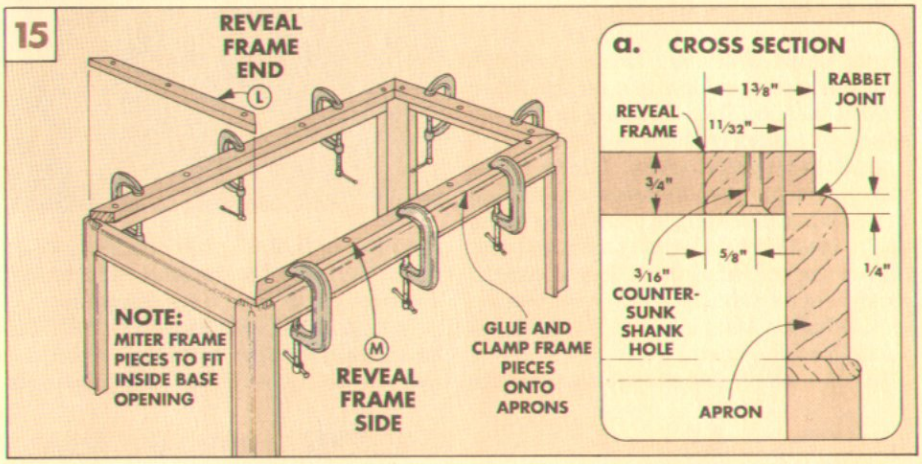

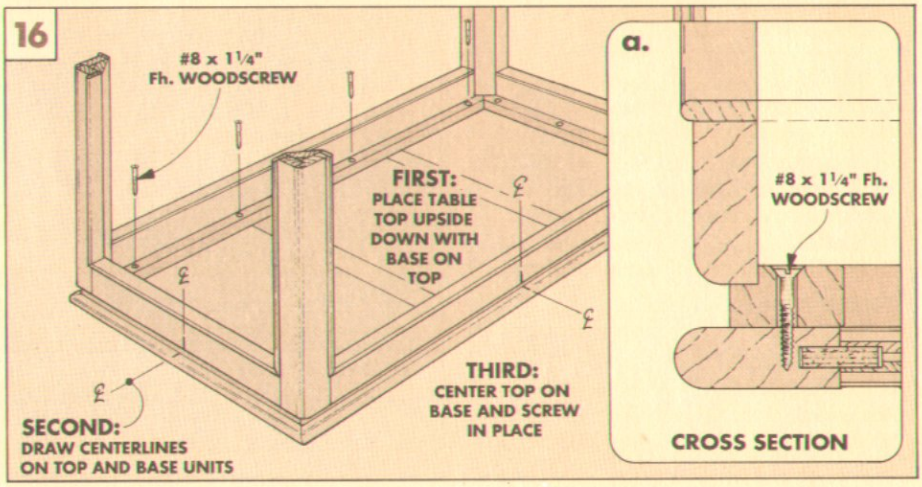

End Table

When I saw how nicely the Coffee Table turned out (see pages 6 to 11), I decided to build a companion End Table. Once I had worked out the design on the Coffee Table, building the End Table went quite smoothly.

Besides the differences in overall dimensions (the End Table is taller than the Coffee Table, but not as long), there are four main design changes on the End Table.

SHELF. The most noticeable change I made was to add a shelf. This is a piece of ¾" plywood cut from the same sheet as the top, with the grain direction running at an angle. To keep the look balanced, the shelf is installed with the grain running at 90° to the grain on the top.

CORNER BLOCK. To mount the shelf, I made use of the corner blocks that fit behind (and run the full height of) each leg. All I did was cut each corner block in two pieces to fit above and below the shelf to hold it in place, refer to Figs. 1 and 2 on the facing page.

SHELF EDGING STRIPS. To hide the exposed edges of the plywood shelf, I added edging strips all around. These are routed with the same profile that's on the frame around the top. Then they're glued to the edges of the shelf after it's mounted.

SIDE/END ORIENTATION. There's one more not-so-obvious difference with the End Table. When it's sitting in your living room, you're most likely to have it positioned with the *narrow* end facing front. This affects the location of the rabbeted corner joint on the legs. What you want is a joint line that's not visible from the front.

On the Coffee Table, the joint line is on the (narrow) *ends*. But on the End Table it's on the (wider) *sides*. So the rabbets on the End Table are cut in the *end* leg assemblies.

BUILDING THE END TABLE. To build this table, begin with the directions for the base that start on page 8. But use the dimensions in the Materials list below and the Exploded View, next page. (Don't forget to rabbet just the *end* units.) When you get to the corner blocks, don't install the lower blocks (G) until you're ready to attach the shelf (refer to Adding A Shelf on the next page).

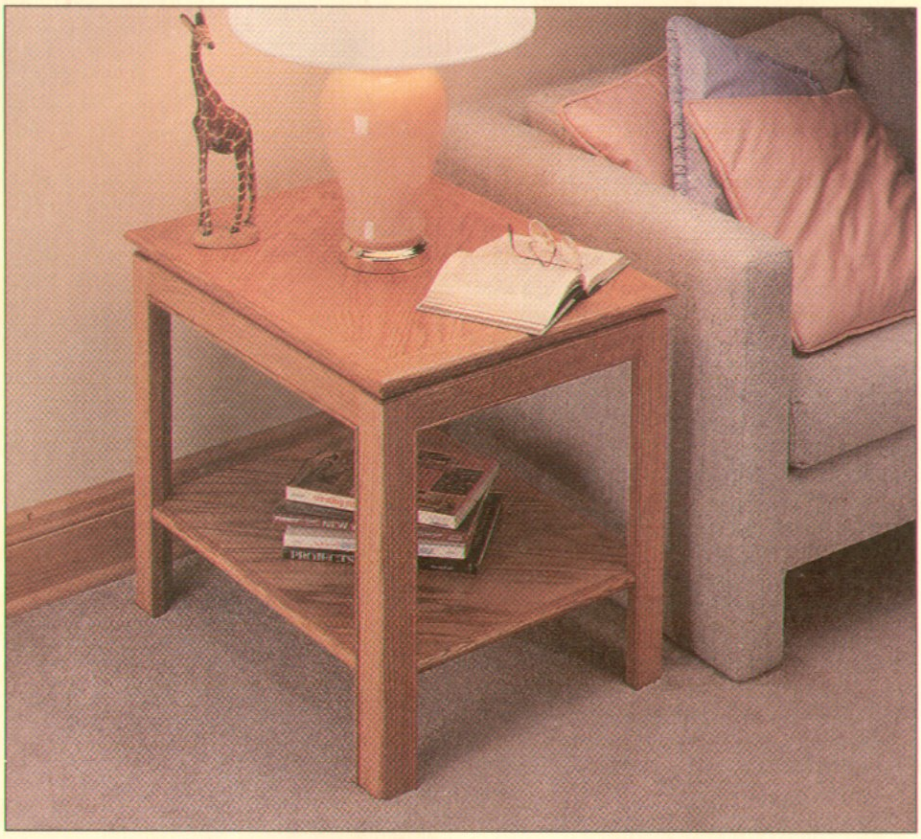

MATERIALS

TABLE BASE		
A	Apron - Ends (2)	¾ x 2 - 18¾
B	Apron - Sides (2)	¾ x 2 - 24¾
C	Leg - Ends (4)	¾ x 2 - 22
D	Leg - Sides (4)	¾ x 1⅝ - 22
E	Beading Strips	¼ x ⅞ - 20' rgh
F	Cor. Blocks - Upp. (4)	¾ x 2³⁄₁₆ - 14¾
G	Cor. Blocks - Low. (4)	¾ x 2³⁄₁₆ - 6¼
H	Shelf (1)	¾ ply - 18 x 24
I	Shelf Edging	¾ x ¾ - 7' rgh
TABLE TOP		
J	Panel (1)	¾ ply - 16 x 22
K	Frame Ends (2)	¾ x 2 - 20
L	Frame Sides (2)	¾ x 2 - 26
M	Reveal - Ends (2)	¾ x 1⅜ - 20 rgh
N	Reveal - Sides (2)	¾ x 1⅜ - 26 rgh

CUTTING DIAGRAM

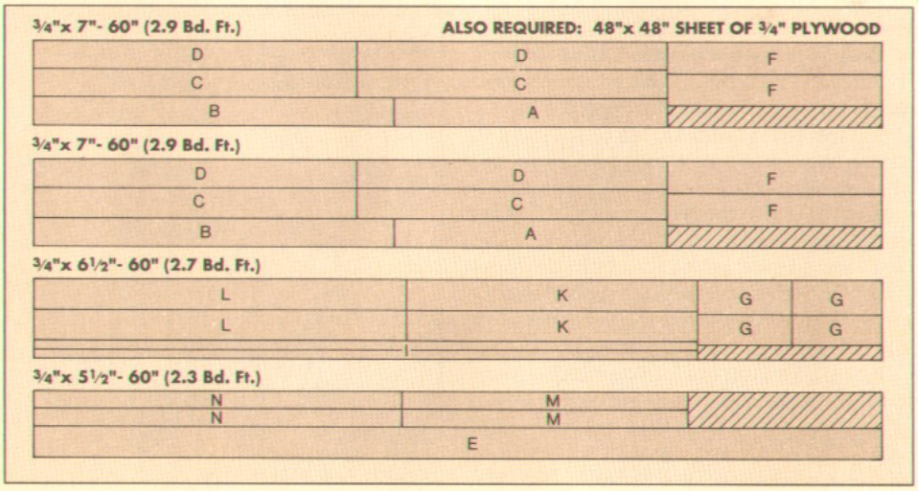

EXPLODED VIEW

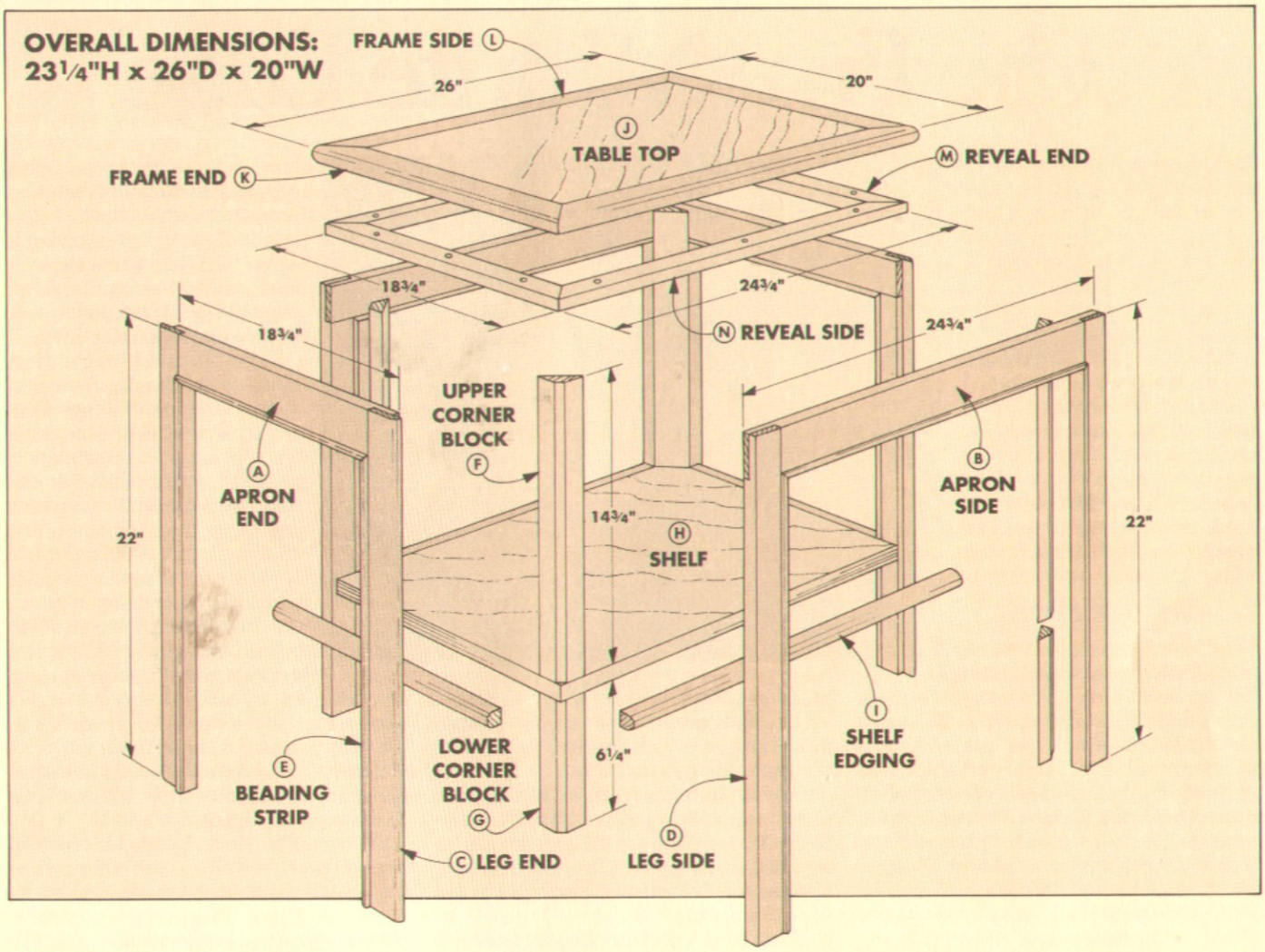

ADDING A SHELF

As you're building the base for the End Table and you're ready to glue in the corner blocks, stop — the shelf comes next. First, cut the **shelf (H)** oversize from a sheet of ¾" plywood. (Refer to Shop Notes, page 16, for information on cutting the piece at an angle.) Then measure inside the corners of the legs to determine the finished size of the panel.

Now, turn the table base upside down and glue in the *upper* **corner blocks (F)**, see Fig. 1. Then, place the shelf good side *down* inside the base and screw the shelf to the blocks, see Fig. 2. (The screws pull the shelf tight to the corner blocks so there's no gap when the table sits right side up.)

Now the **lower corner blocks (G)** can be cut to finished length and glued in place above the shelf, see Fig. 2. Make sure they're flush at the bottoms of the legs.

Finally, I cut **edging strips (I)**, and rounded over the edges with a ⅜" round-over bit on the router table. Then the strips can be cut to length to fit between the legs, and glued to the edges of the shelf, see Fig. 2.

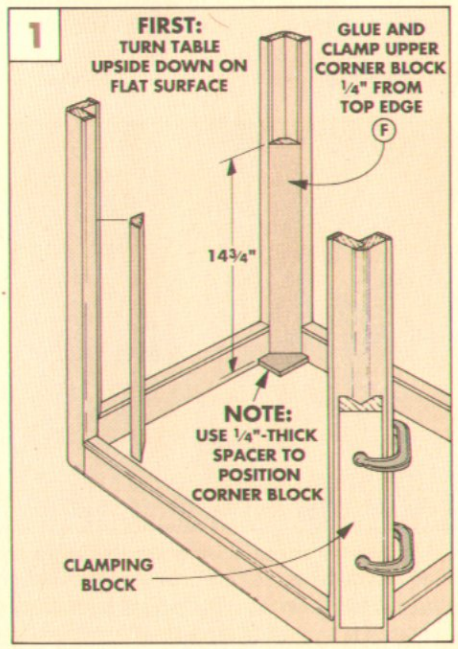

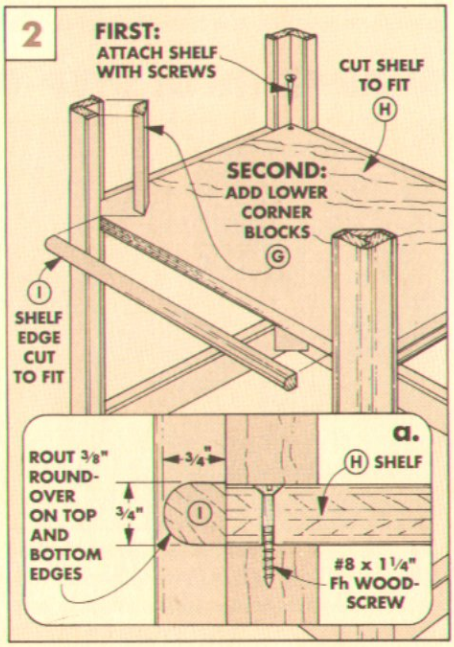

The Five Minute Edge

■ How often have you put off sharpening a chisel because you're in the middle of a big project and you didn't want to take the time? I'll admit I've done it more than once. I usually end up grabbing a sharp chisel that's too narrow or too wide. Then I'm usually sorry I didn't take the time to sharpen the right tool.

But it doesn't have to take a long time. There's no reason you can't get a razor sharp, long lasting edge in five minutes or less. In fact, it'll probably take you more time to read these two pages about how to do it, than it will to sharpen a beat-up chisel.

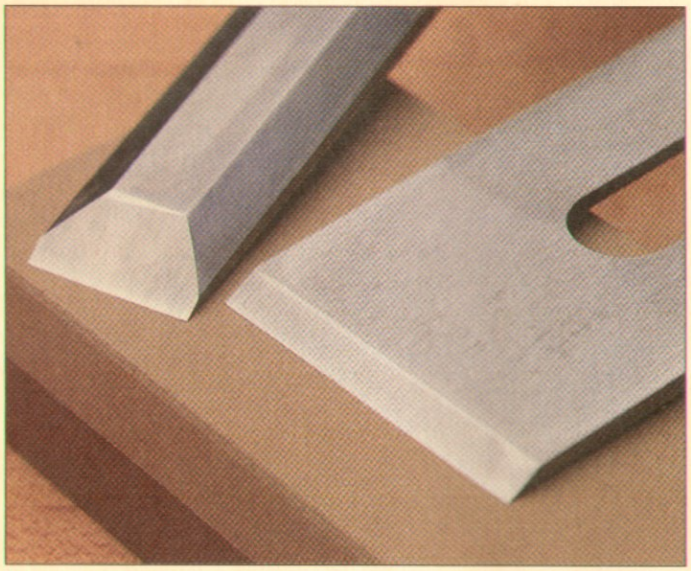

FIRST THE BEVEL

This is a two-step process: grinding a bevel on a wheel; then honing the edge on a sharpening stone.

The first step is to grind the bevel. I use an electric bench grinder for this, so I get a hollow ground bevel — the bevel reflects the curve of the grinding wheel. I prefer a hollow ground bevel to a flat bevel that you'd grind on a stone. First, it's easier to make a uniform hollow ground bevel. And second, honing is fast because very little metal needs to be removed to hone the edge razor sharp, see photos on opposite page.

GRINDING WHEEL. I'd recommend a 60-grit white aluminum oxide wheel for grinding (see page 31). It cuts fast. And just as important, the binder or "glue" used on a white aluminum oxide wheel allows the particles to break away faster than the particles in a general purpose wheel.

This is good for two reasons. First, a white aluminum oxide wheel cuts faster because the cutting surface doesn't get clogged up with bits of cut-off metal. And, since it's not clogged up, the chisel doesn't get as hot while grinding.

I think heat is one of the biggest problems most people have when sharpening. If a chisel or plane iron starts to turn blue when you're sharpening it, it's too hot. There's no quicker way to ruin a tool. What happens is the tool heats to a temperature that causes it to lose its "temper." (Tempering is a heat treatment that makes the metal tougher so it will hold an edge longer.) If the metal loses its temper, it won't stay sharp.

Note: To avoid overheating, dip the bevel in a cup of water at regular intervals while grinding.

UNIFORM BEVEL. Grinding a bevel is easy. The challenge is grinding a *uniform* bevel — one that's the same width across the end of the tool. And one with a cutting edge that's 90° to the side of the tool. There are a couple of simple tricks for doing this.

ADJUST THE TOOL REST. First, adjust the tool rest on the grinder so the chisel or iron can lie on the flat surface of the rest, not just against the upper or lower edge, see Fig. 1. This way you have more control.

The bevel on most chisels and plane irons is 25°. So set the tool rest to grind this same bevel on your tool, see Fig. 1.

STOP BLOCK. Next, I clamp a block of wood to the tool so the block butts against the lower edge of the tool rest during sharpening, see Fig. 2. This provides a positive reference point (a stop) so you can lift the tool off the wheel to inspect the bevel or dip it in water. Then the tool can be returned to precisely the same spot on the wheel.

SHARPENING: STEP-BY-STEP

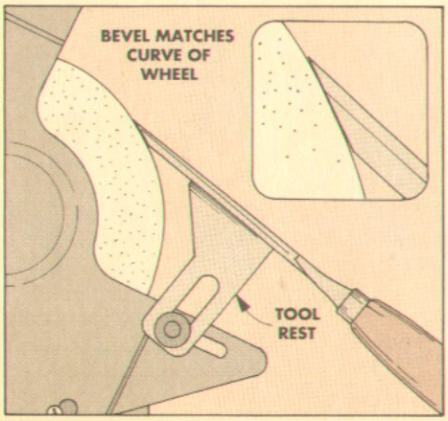

1 *To start, lay the chisel flat on the tool rest. Then adjust the angle of the tool rest so the bevel of the chisel is roughly parallel to the curve of the grinding wheel.*

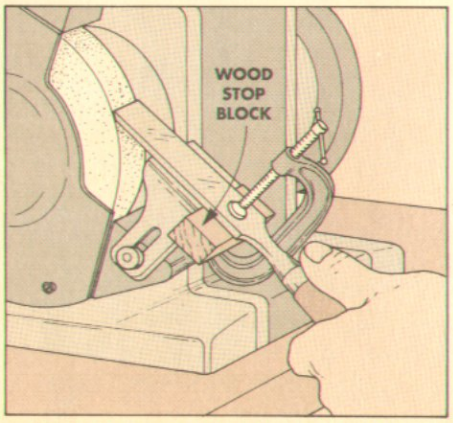

2 *Before grinding the bevel, clamp a stop block to the bottom side of the chisel. Position it so it butts against the tool rest and is square to the side of the chisel.*

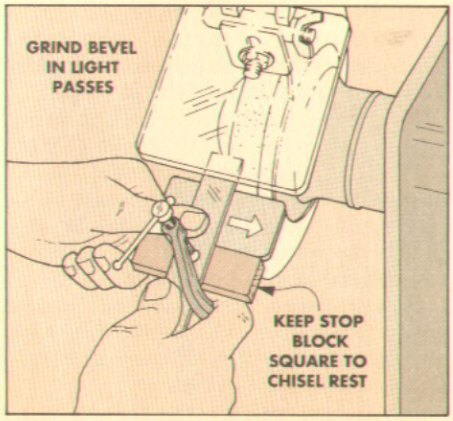

3 *Next, grind the bevel using light side-to-side passes across the wheel To avoid overheating the edge, move the chisel smoothly — don't linger on one spot.*

SHORT CHISELS. Some chisels are too short to attach a stop block. In that case, you can use just a small C-clamp as a stop. But if there's room, I use a stop block. This is because the block has an added advantage — it also helps hold the tool perpendicular to the edge of the tool rest. This makes it easier to grind a bevel that's 90° to the side of the tool.

GRIND THE BEVEL. With the tool rest in position and the block clamped to the tool, you're ready to grind the bevel. To do this, turn on the grinder and place the block against the tool rest. Then move the bevel of the tool gently across the wheel, see Fig. 3.

After a couple of light side-to-side passes, see if the bevel is even, and if the cutting edge is square to the side, see Fig. 4. Note: If the cutting edge isn't quite square, increase or decrease the angle between the side of the chisel or plane iron and the top edge of the stop block. Then grind a little more off the bevel until the edge is square to the side.

THE CUTTING EDGE: CLOSE UP

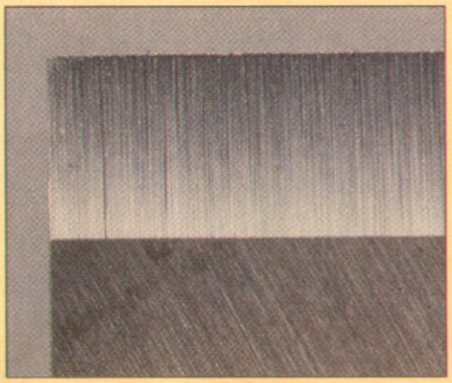

▲ *This hollow ground bevel is ready to be honed. The grinding wheel leaves rough scratch marks and a ragged cutting edge.*

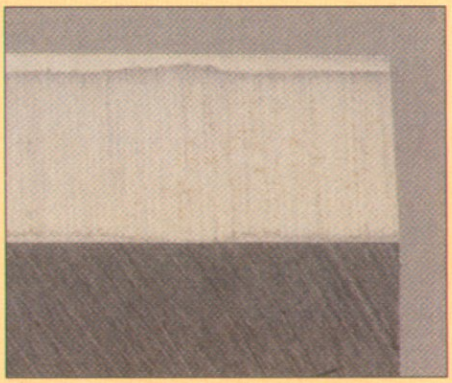

▲ *A well-honed edge like this requires the removal of little material. The wheel marks are gone and the cutting edge is smooth.*

NOW THE EDGE

After grinding the bevel, you're ready to move from the grinding wheel to the stone. To hone a tool that's been hollow ground, I use a 1000-grit Japanese waterstone (see page 31). I like to use waterstones because they cut very fast. The 1000-grit waterstone (a "medium" grit stone) will hone the cutting edge to a near mirror finish.

REMOVE THE BURR. When you've finished grinding the bevel, you'll notice that the grinding wheel raised a burr along the back of the cutting edge. So the first step is to remove that burr. To do this, hone the back of the last inch of the chisel flat on the sharpening stone, see Fig. 5.

HONING. After removing the burr, you're ready for the final step: honing the cutting edge. Why hone it? After all, you've probably got a darn sharp edge already. The answer lies in what makes an edge last a long time.

If you take a close look, after grinding the bevel, you can see marks left by the wheel, see left photo above. Magnified, they look like deep grooves. These create a ragged cutting edge that feels sharp. But it doesn't stay sharp because the points on that ragged edge break off easily. The more they break, the more ragged the edge becomes, making it duller faster — a sort of snowball effect.

To make a long-lasting cutting edge, you'll need to remove that ragged edge. The smoother you get the edge, the longer the edge will stay sharp.

To hone the cutting edge, place the hollow ground bevel on the stone so both the front and back edges of the bevel touch the stone, see Fig. 6. Then gently push the bevel over the stone. You can push from end to end, or make little arcs. Just do what is easiest for you to keep both the front and back edges of the bevel on the stone.

How long do you hone? Until the grinding wheel marks along the cutting edge disappear, see photo above right. Then check for a burr on the back of the edge. When you feel a burr along the whole cutting edge, hone it off, and your chisel is ready to use.

TOUCH-UP. One of the really nice things about this technique is that touching-up the edge after use is really quick. This is because you don't need to re-grind the bevel, just re-hone the edge. You should be able to touch-up the edge several times before you'll need to grind a new bevel.

SHARPENING SESSION. But what if you're not in a hurry? I use the same technique — with an additional step. After honing the back and the cutting edge with the 1000-grit waterstone, I polish both faces with a 6000-grit waterstone.

The 6000-grit stone polishes the edge to a mirror finish in just a few passes. It makes the edge sharper, and it stays sharp longer.

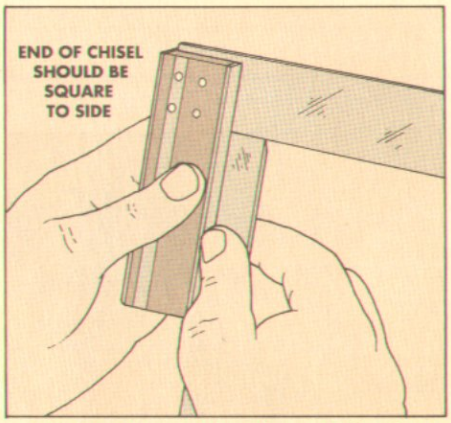

4 *Check to see that the cutting edge is square to the side of the chisel. If not, increase or decrease the angle between the guide block and the chisel, and re-grind.*

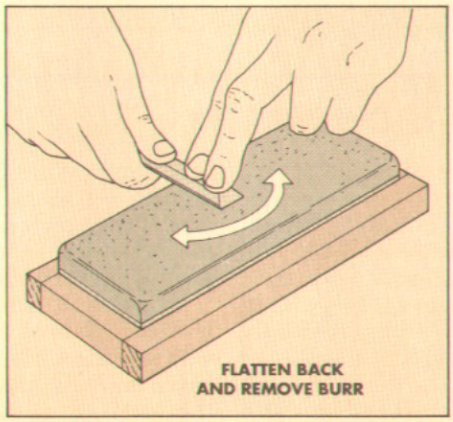

5 *After grinding the bevel, the next step is to remove the burr on the back of the cutting edge. To do this, hone the back of the chisel on a sharpening stone.*

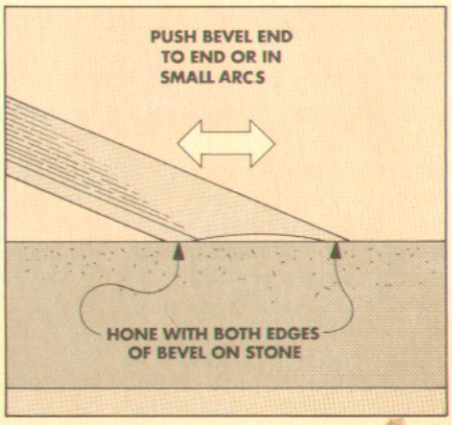

6 *Finally, hone the cutting edge by rubbing both edges of the bevel on the stone. Do this only until the grinding wheel marks are gone from the cutting edge.*

Shop Notes

CUTTING PANELS AT AN ANGLE

■ The top of the Coffee Table on page 6 features plywood panels mounted in a frame. To give the table a more interesting look, I decided to cut the panels so the grain would run at an angle across each panel.

The problem was finding the best way to cut a piece of plywood into the three panels needed for the Coffee Table. The procedure I used involved a number of steps.

LAY OUT PANELS. The first thing to do is draw a pencil line at a 45° angle across one corner, see Fig. 1. This line indicates one edge of each panel. Then use a framing square to lay out all three panels, working off the first pencil line.

Shop Note: Lay out the panels oversize in each dimension to allow for cleaning up the rough cuts, see Fig. 1. (For the Coffee Table, this oversize dimension is 20" long and 14" wide.)

SABRE SAW ROUGH. Start by making a single straight cut along the first layout line, see Fig. 1. To do this, I used the sabre saw guided by a straightedge. After this first cut, use the sabre saw freehand to cut out each panel, carefully following the pencil lines.

SAW A CLEAN EDGE. Next I moved to the table saw. The goal of the first cut on the table saw is simply to get a clean, straight edge. (The sabre saw probably left some splinters.) So run each panel through the table saw with the straightest sabre-sawn edge against the rip fence, making a straight cut along the opposite edge, see Fig. 2.

SAW ADJACENT EDGE. The next step is to establish one square corner on each panel. Here I switch to the miter gauge and square up a corner by holding the table-sawn edge against the miter gauge, see Fig. 3.

Shop Note: A panel-cutting jig for the table saw would make this step even easier.

You should now have one clean, straight *long* edge, and one clean, straight *short* edge on each panel, with a square corner in between.

SAW TO DESIRED SIZE. The last step is to cut each panel to the desired size. This involves trimming the remaining two (sabre-sawn) edges using the rip fence set to the desired dimensions. (Now all three panels should be the same size.)

One more thing. Make all the table saw cuts with the plywood panels *good side up*. This way, any chipout will be on the bottom side of the panels where it won't be visible after assembly.

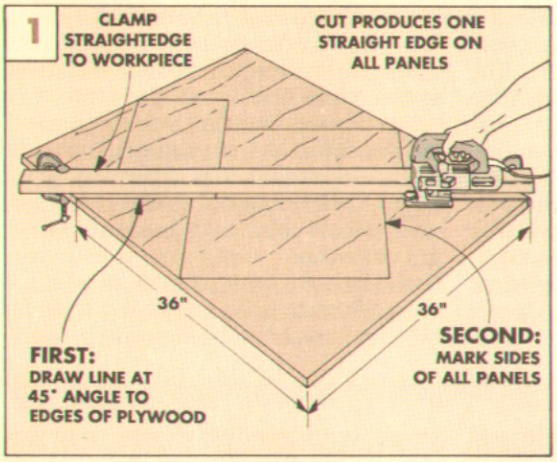

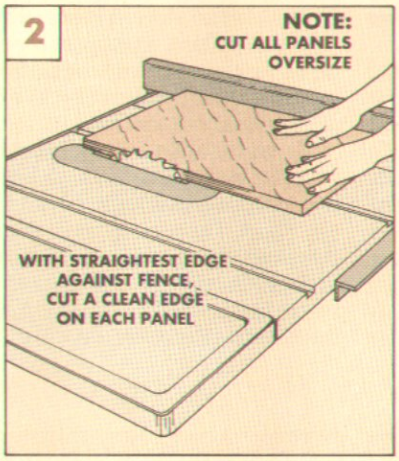

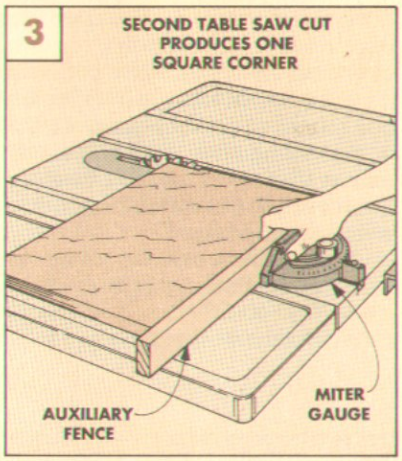

DEALING WITH WOOD MOVEMENT

■ If you build the Country Bench (beginning on page 18) in the winter when your shop is dry (or in any dry environment), you should take into account that the wood will expand if the humidity goes up in the summer.

This can be a problem on many projects, but on the Country Bench it's the back slats you have to consider. Because the slats are screwed to cleats independently of each other, each slat can shrink and swell with changes in humidity. So if you butt them together when the wood is dry, the slats might buckle when the wood expands.

EXPANSION RATE. If you build the bench in a dry shop, you can figure each 5"-wide slat will swell across its width by about 1%, or as much as 3/64". So they should be attached to the cleats with a gap this size between them.

CARD TRICK. The trick is to space the slats evenly and consistently during assembly. To do this, I used playing cards as spacers, see photo. The thickness of three cards is just about the right amount of space (four cards is too much space).

Shop Note: It's always a good idea to let the wood for a project sit in your shop a few days before beginning the project. This way, the moisture content has a chance to stabilize (reach an equilibrium) to the humidity level of your shop. Then you can use the "card trick."

SHOP-MADE EDGE GUIDE

■ About the time I was trying to figure out the best way to cut the half laps and rabbets on the Coffee Table (page 6), I got a letter from **John Gunter** of Catonsville, Maryland.

To solve a problem he had cutting tenons on the end of a long workpiece, John built an edge guide for a hand-held router, see photo. The guide is similar to store-bought edge guides available for most routers, but I think it's a little more versatile.

HALF LAPS. The aprons on the Coffee Table connect to the legs with half lap joints. But the aprons are too long to stand on end on the table saw and cut easily. With this edge guide, I was able to clamp the aprons to my bench and run the router over the workpiece, see photo.

RABBETS. Another thing I liked about John's edge guide is that it could be used to cut the ¾"-wide rabbets on the Coffee Table leg units after they're assembled (or oversize rabbets on any workpiece).

ROUND-OVERS. This edge guide also came in handy routing a round-over on the edge of the frame that surrounds the Coffee Table top. Using this jig made the job easier and safer than balancing the large assembled top on the router table.

BUILDING THE GUIDE

The shop-built edge guide has two main parts. There's a base of ¼" Masonite with a hole at one end for a router bit, and a handle at the other end for controlling the jig. Also, there's an adjustable fence with a notch in the middle that lets you rout with a bit recessed into the fence.

BASE. When the base is cut to size (see Fig. 1), bore a 1"-dia. hole through one end for the router bit to extend through. Then, remove the existing base from your router and use it as a template to locate the mounting holes on the new base.

After drilling holes for the mounting screws, bore a series of holes in the base to form two slots for adjusting the fence, see Fig. 1. Then screw a dowel handle to the other end. Finally, attach the base to the router.

FENCE. I made the fence from a piece of ¾"-thick hardwood with a notch in the center and holes in both ends for countersunk bolts, see Fig. 1. Two flathead machine bolts with wing nuts hold the fence to the base.

USING THE GUIDE

To use the edge guide, first adjust the distance between the fence and the outside edge of a straight router bit, see Fig. 2. This distance determines the width of the cut, see Fig. 2. The depth of the cut is determined by the height of the router bit.

To rout a half lap with this guide, make the first cut (to establish the shoulder) with the fence butted to the end of the workpiece, see Fig. 3. Then clean out the waste between the shoulder and the end of the workpiece, see Fig. 4.

Editor's Note: We're sending John Gunter $100 for submitting this edge guide plan. If you have a good tip or idea, write us at the address on page 5.

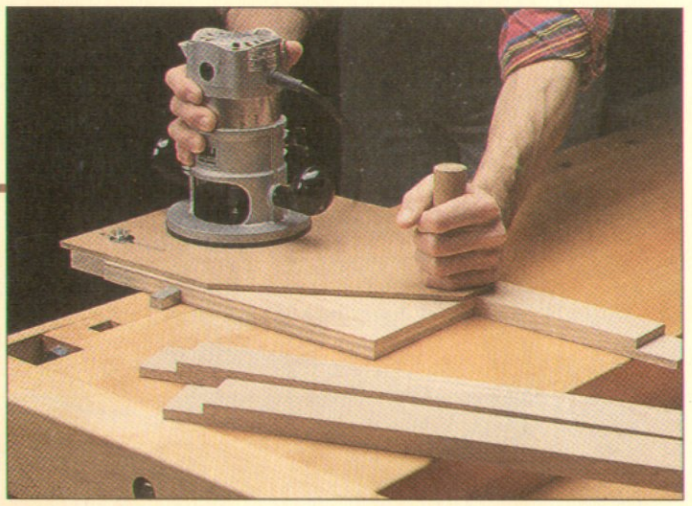

When routing half laps on a narrow workpiece, clamp a scrap of plywood on the outfeed side of the cut. This provides a wider edge for the fence to ride along—and eliminates chipout.

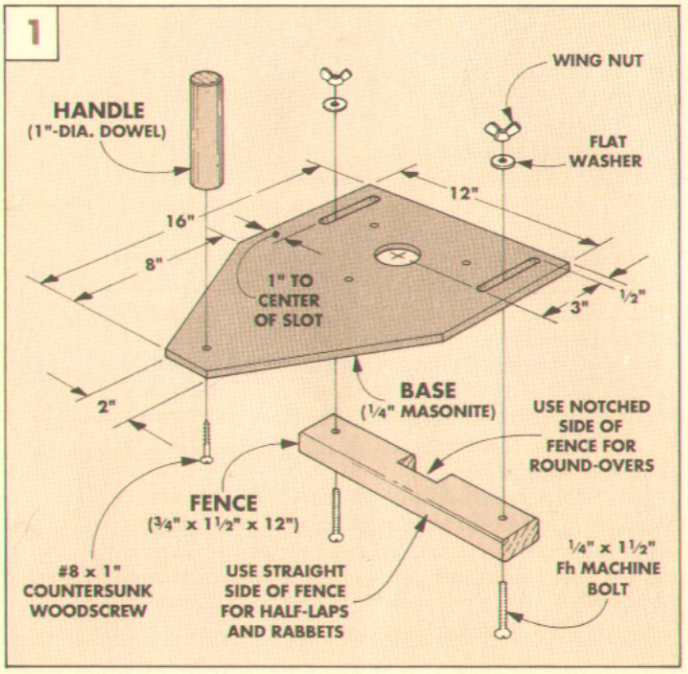

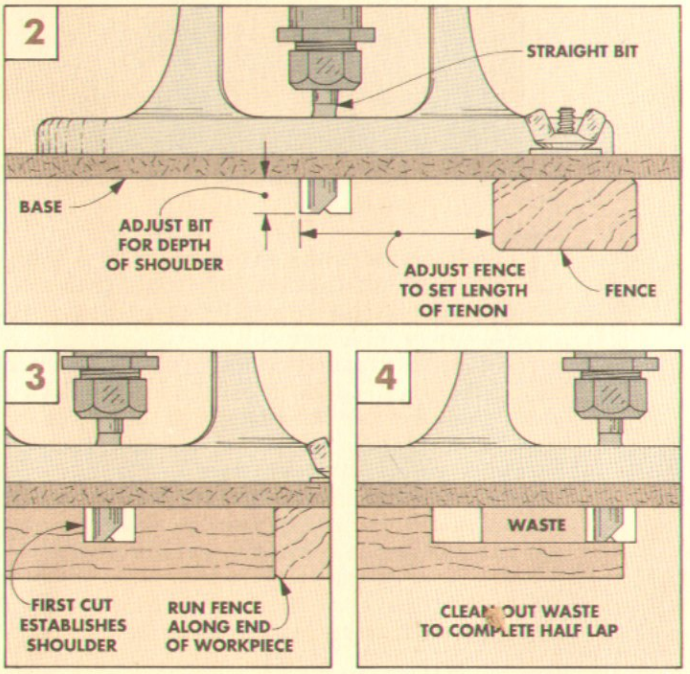

High Back Bench

The large panels that make up this bench are built using two different techniques. The back panel is constructed from individual slats and cleats. The seat and side panels are constructed from glued-up boards.

The design feature that gives this High Back Bench its unique, old-fashioned look is the V-groove between all the individual boards. It highlights all of the joints — instead of hiding them.

I used two techniques to cut the V-grooves. Since the back of the bench is made up of individual boards that *aren't* glued together, the edges of all the boards are routed with a chamfering bit *before* assembly. Then the boards are held together with cleats.

But the seat and sides are made of glued-up panels. Here it's easier to cut the V-grooves *after* gluing up each panel. I did this on a table saw with the blade tilted to 45°.

WOOD. I used ¾"-thick No. 2 Ponderosa pine for most of the parts of the bench, and common straight-grained 1½"-thick stock for the supports under the seat.

FINISH. While I was working on the High Back Bench one afternoon, Phil, one of our assistant editors, came wandering into the shop and suggested we finish the bench with milk paint. Unfortunately, he was about an hour late, I had just put on a coat of stain and was about to add a coat of clear finish. Undaunted, Phil launched into building a second High Back Bench — just to cover it with a couple coats of milk paint and see how it would turn out, see page 32.

For my bench (shown above), I first applied a coat of McCloskey's Stain Controller to help the wood absorb the stain evenly. For the stain, I used one pint of Minwax Golden Oak mixed with one pint of Minwax Colonial Maple. Then, as a clear sealer, I wiped on two coats of General Finishes' Royal Finish (satin).

EXPLODED VIEW

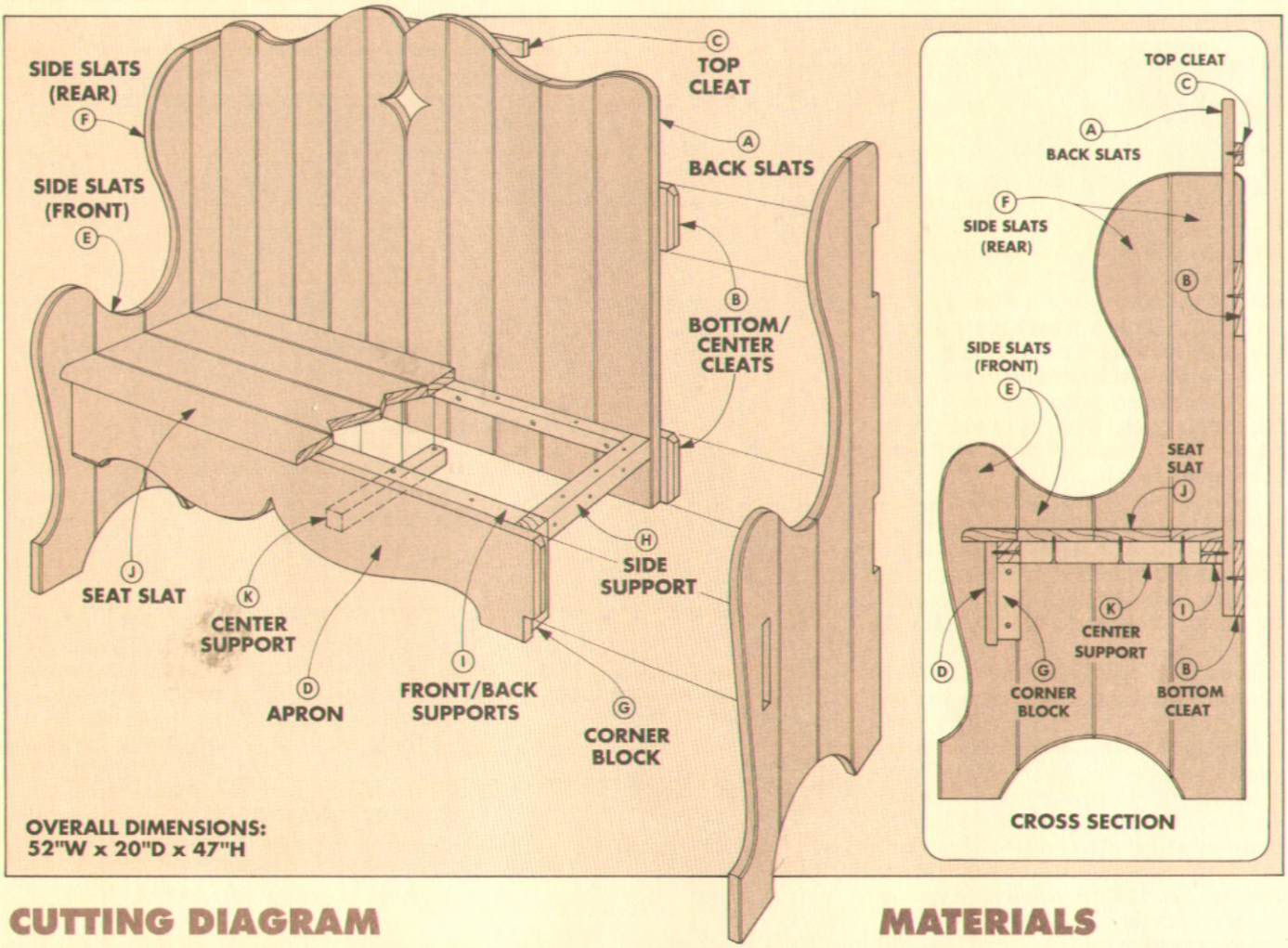

CUTTING DIAGRAM

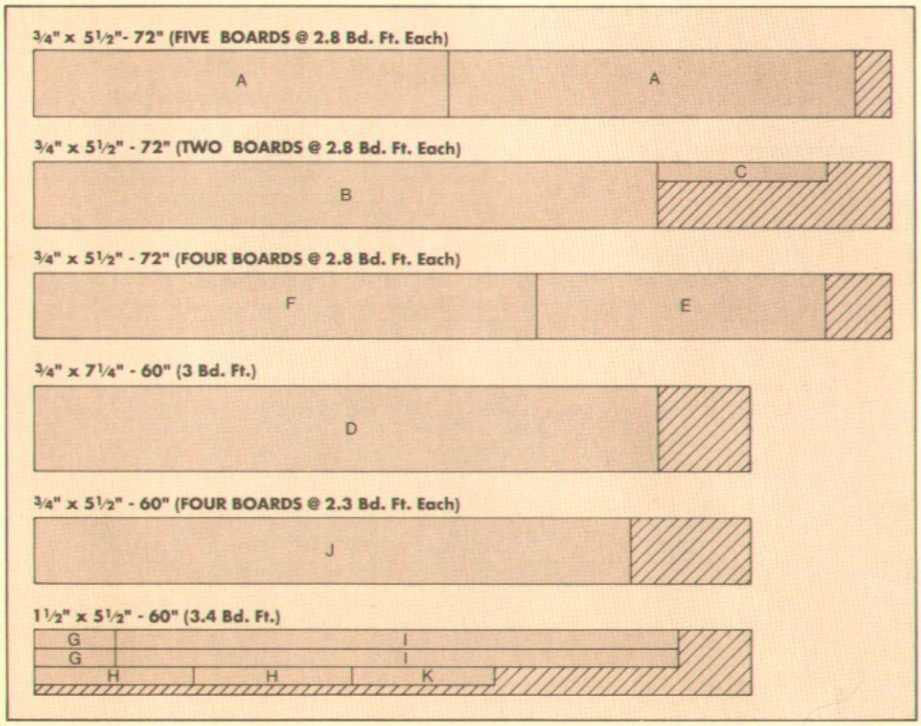

MATERIALS

BACK	
A Back Slats (10)	3/4 x 5 - 34 3/4
B Btm./Ctr. Cleats (2)	3/4 x 5 - 52
C Top Cleat (1)	3/4 x 1 1/2 - 14
APRON	
D Apron (1)	3/4 x 7 - 52
SIDES	
E Front Slats (4)	3/4 x 5 - 24
F Rear Slats (4)	3/4 x 5 - 42
SEAT	
G Corner Blocks (2)	1 1/2 x 1 1/2 - 6 3/4
H Side Supports (2)	1 1/2 x 1 1/2 - 13 1/4
I Fr./Bk. Supports (2)	1 1/2 x 1 1/2 - 47
J Seat Slats (4)	3/4 x 5 - 50
K Center Support (1)	1 1/2 x 1 1/2 - 11 3/4

ALTERNATE PATTERN

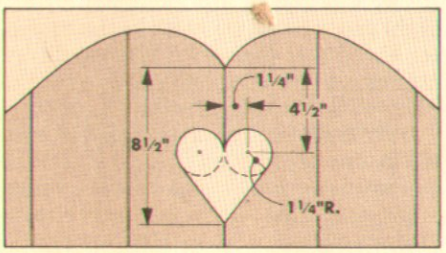

BACK

I started working on the bench by building the back. The back consists of ten slats supported by two cleats — much like a picket fence.

BACK SLATS. I wanted the High Back Bench to comfortably seat two adults. So, I built both the seat and the back 50" wide. Begin, by ripping enough ¾"-thick boards to width for ten **back slats (A)**, see Fig. 1. Then, cut the slats 34¾" long.

To give the bench a traditional look and to minimize splinters in the backside, I routed the edges of each slat with a chamfering bit on the router table, see Fig. 2a. (Don't chamfer the ends.)

BOTTOM AND CENTER CLEATS. The **bottom** and **center cleats (B)** each support the back slats. To make the cleats, first rip two boards to width, see Fig. 1. Then, cut them to length. Note: The cleats are 2" longer than the combined widths of all the back slats. (In my case, 52" long.)

To dress up the ends a little, I routed a ¼" chamfer around both ends of each cleat, see Fig. 2a.

BACK ASSEMBLY. Once the cleats are chamfered, the back is ready to be assembled. To ensure the proper distance across the back, first attach the bottom and center cleats to the two *outside* slats. To do this, place the slats face down on a flat surface, see Fig. 2. Then, position the *outside* edges of each slat 50" apart.

Next, place the bottom cleat on top of the two slats, see Fig. 2. Then, adjust the position of the cleat so it overhangs the side of each slat by 1", and is flush with the bottom end of each slat.

Drill and screw in only one screw at each cleat/slat point for now — you'll install the second screw after the frame is square.

The center cleat can be attached to the slats the same way. Position it 13¾" up from the top edge of the bottom cleat, see Fig. 2.

Now, square up the frame and install the remaining screws. (Two screws at each joint will prevent the back from racking.) After the screws are in place, attach the remaining slats, working from the outside in and butting the edges of the slats together.

Shop Note: If you're building the bench during a period of low humidity, leave a slight gap between the slats for expansion, see Shop Notes on page 16. This means you may have to trim the width of a few of the inside slats and rechamfer the edges.

TOP CLEAT. Finally, cut a small **top cleat (C)** to size, see Fig. 1. (This cleat supports the two center slats so you can cut a design in the back.) Then screw this small cleat to the back of the four center slats, see Fig. 3.

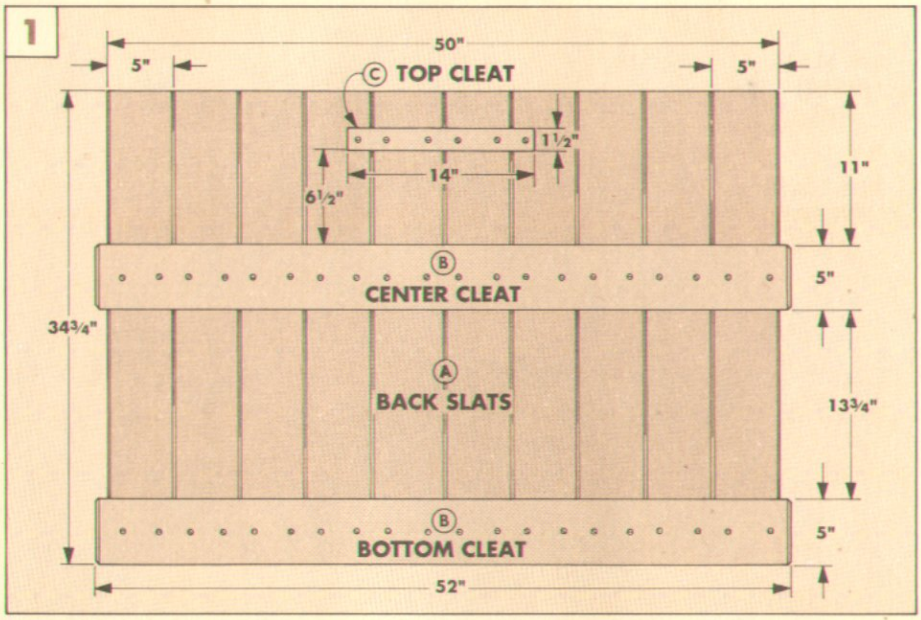

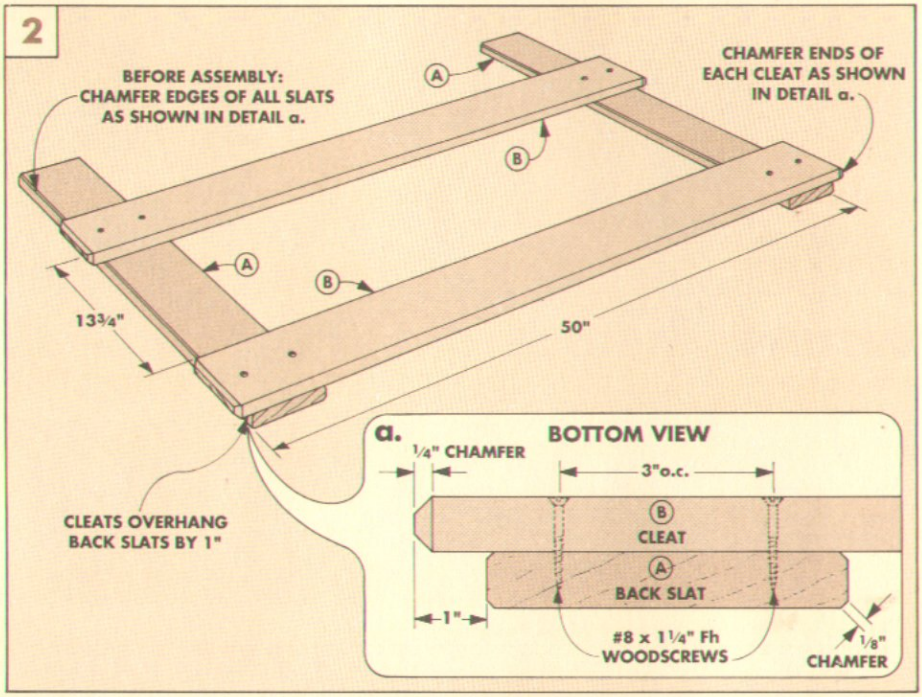

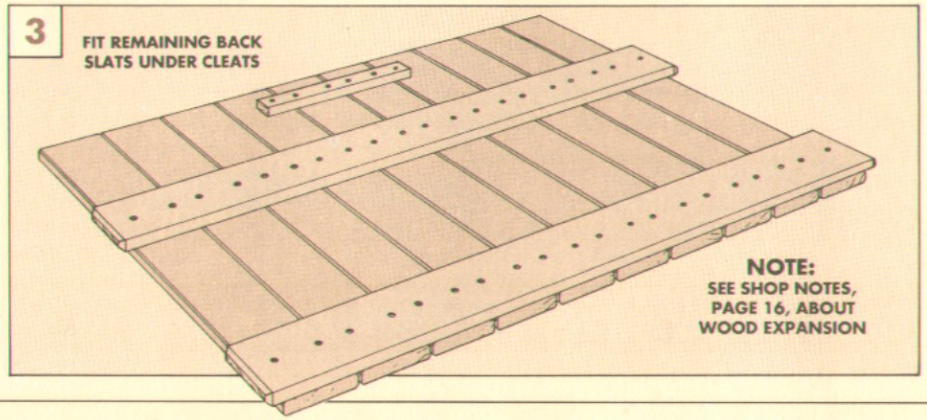

SHAPING BACK

To add a bit of country flair to the back, I cut a design along the top edge and a diamond in the center of the back using a sabre saw.

BACK PATTERN. To shape the back as symmetrically as possible, first draw the half pattern full size on a large piece of paper, see Fig. 4. Then, transfer the half pattern to a piece of 1/8"-thick Masonite to be used as a template. (Note: Patterns for all the shapes on the bench are available from *Woodsmith Project Supplies*, see page 31.)

Next, cut the template out with a band saw or sabre saw and sand the curves of the template smooth. We've included an alternate heart shaped pattern (on page 19) that can be used in place of the diamond.

SHAPING THE BACK. Now, the pattern can be traced onto the back. To do this, first remove the top cleat (C). Then, trace the pattern onto one half of the back. Flip the template over to the opposite half and trace the template again to complete the pattern.

Shop Note: I worked from the back side because my sabre saw cuts on the upstroke. This way, any splintering that the blade creates is hidden in the back.

CHAMFER EDGES. After the curved top edge and diamond have been cut, sand the edges to remove any saw marks and form a smooth shape. Next, rout a chamfer on the front and back along the top edge and inside the diamond, see Figs. 5 and 5a.

Because the router bit couldn't reach into the tight corners, I had to complete the chamfers with a file, see Figs. 6 and 6a.

After you're through chamfering the edges, reattach the top cleat (C).

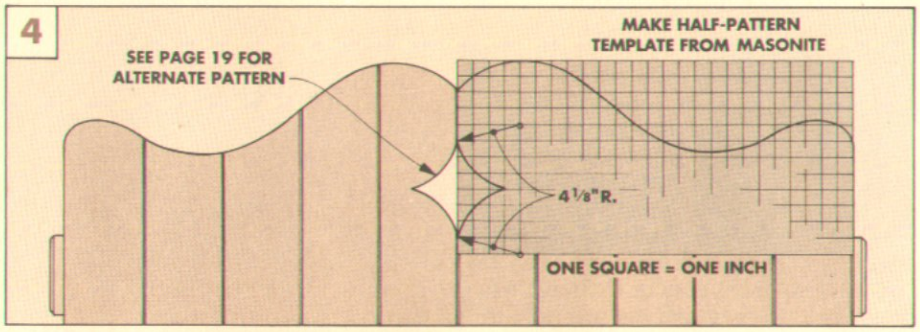

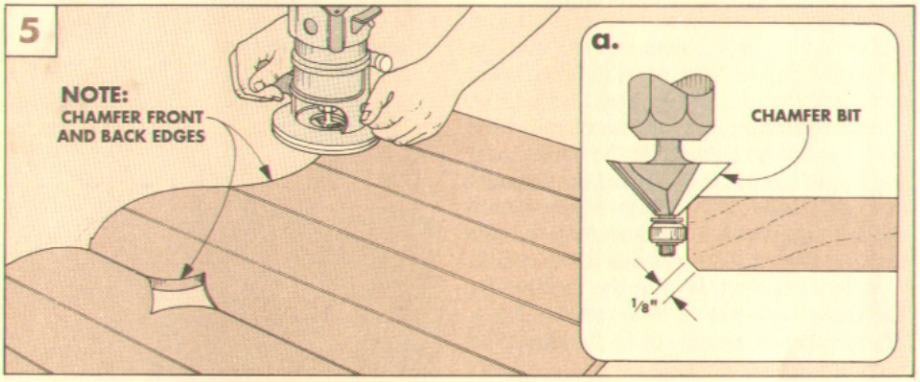

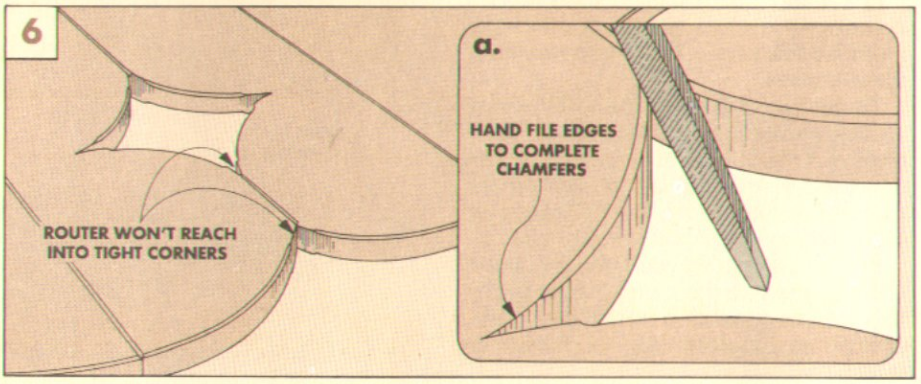

APRON

The next step is to cut an **apron (D)** that fits below the seat and between the sides. Cut the apron 7" wide from a 3/4"-thick board, see Fig. 7. Then, cut the apron the same length as the back cleats (B). (In my case, 52" long.)

TENONS. Next, cut a notch in order to form a tenon on each end of the apron, see Fig. 7a. The remaining "tenons" will fit into mortises that are cut later into the side panels of the bench. To cut the notches, I used the table saw with the blade raised to 2" and made a cut 1" from each end. Then, I removed the waste with a back saw.

After the tenons are formed, the end of each tenon is chamfered the same as the ends on the cleats, see Fig. 7a. Shop Note: Chamfer the bottom edge of the tenon with a back saw or file.

PATTERN. The apron can be shaped in the same manner as the back. First, make a template just as you did for the back, see Fig. 7. Then, trace the template on the apron and cut out the shape. Finally, rout a chamfer along the bottom edges of the apron.

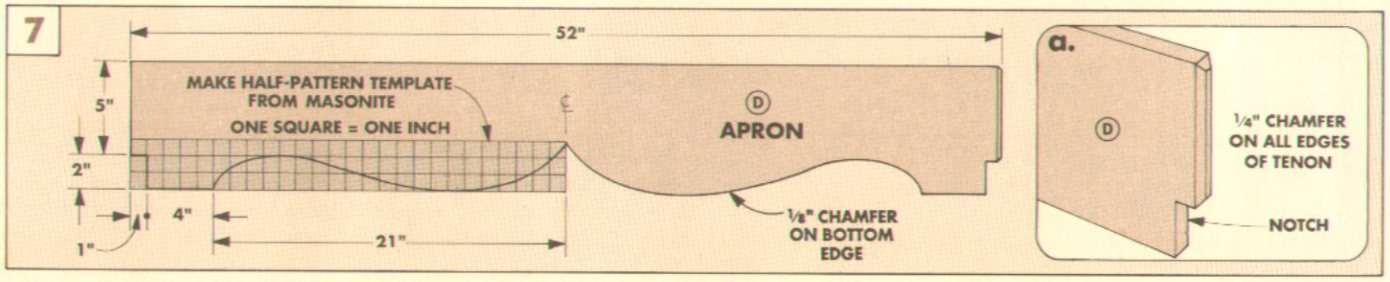

SIDES

Next, work can begin on the two side panels.

SIDE PANELS. The panels consist of two short boards and two long boards. Start by ripping enough ¾"-thick stock to width for four **front slats (E)** and four **rear slats (F)**, see Fig. 8. Then, cut the front slats 25" long and the rear slats 43" long. (The slats are oversized by 1".)

Now, glue two front and two rear slats together to form an "L" shaped blank, see Fig. 8. Once the glue dries, sand the panels flat and cut off the ends of the panels to final size.

NOTCHES. Now, lay out notches on the back edge of each panel for the back cleats, see Fig. 8. To cut the notches, I used a sabre saw and a chisel. Cut the three edges on each notch a little short. Then, sneak up to them with a chisel until the notches fit the cleats.

MORTISES. Next, lay out the location for each mortise to attach the apron, see Fig. 8. Then, cut each mortise to fit the apron (D) tenons, see box below.

CUT V-GROOVES. I wanted the joints on the side panels to look like those on the back. So on the side panels, I cut V-grooves along the glue joints.

To cut these V-grooves, I used a rip blade (because of the blade's flat-top profile) tilted to 45°, see Fig. 9. Move the rip fence to position each bevel. And, before moving the fence for the next bevel, flip the board over to cut the opposite side of the glue joint.

CUT TO SHAPE. To complete the sides, make a pattern in the same manner as you did for the back and apron, see Fig. 10. Then, chamfer all the edges. (Do not chamfer inside the notches.)

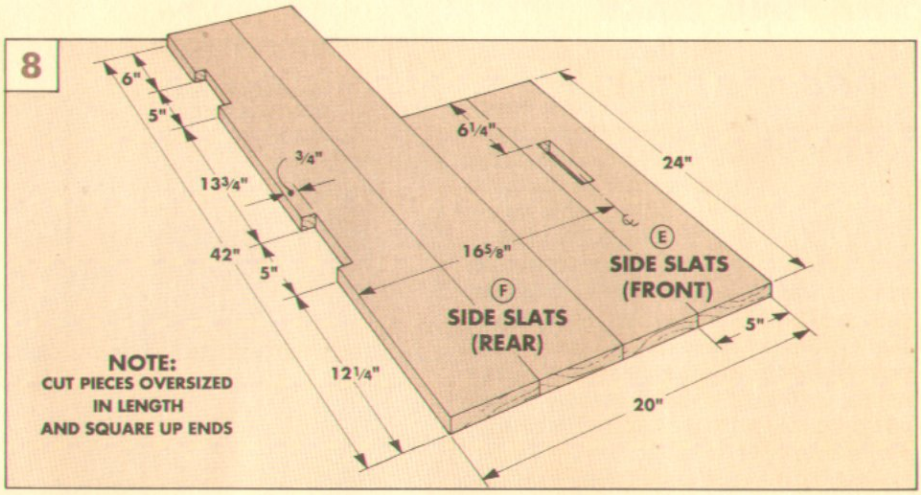

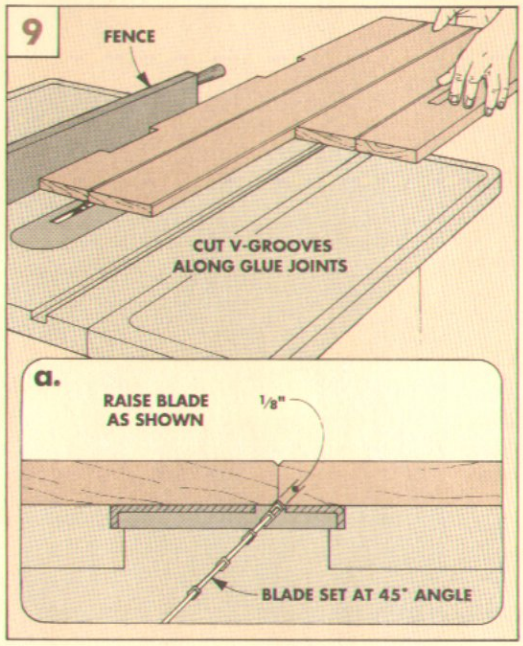

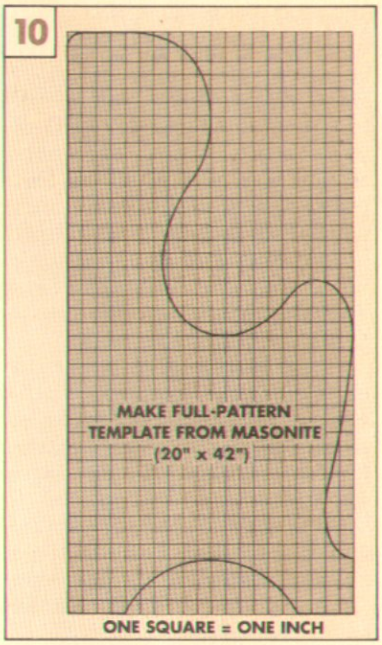

CUTTING MORTISES

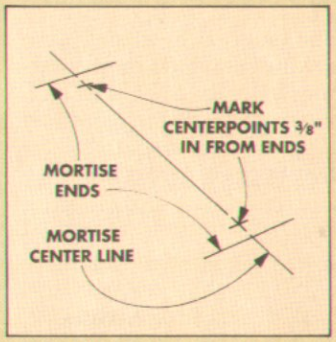

1 *First, lay out the mortise's centerline and ends. Then, mark pilot hole centerpoints ⅜" from each end.*

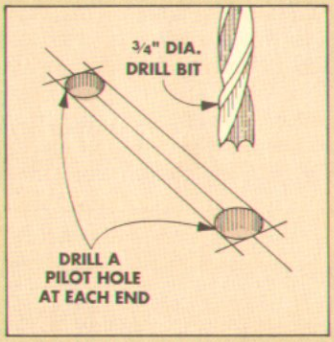

2 *Drill a ¾" hole at each centerpoint. Next, lay out the edges of the mortise. Use the pilot holes as reference.*

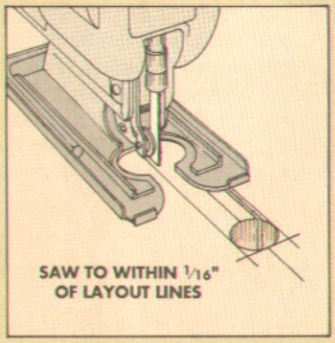

3 *Remove waste using sabre saw. (Or you could chisel out each mortise.) Cut to within 1/16" of all layout lines.*

4 *Cut mortise to fit tenon by chiseling up to layout lines. To prevent chipout, work from both faces.*

ASSEMBLY

Before making the seat for the bench, you first have to glue the side panels to the back panel and apron.

To do this, first spread a small amount of glue around the edges of the apron tenons. Then, insert the tenons into the mortises in the sides, see Fig. 11. Next, clamp the sides and apron together with a couple of bar clamps stretched across the front of the bench. Note: Make sure the tenon shoulder is tight against the sides.

Now, lift the back into place, and slip the bottom and center cleats into the side panel notches, see Fig. 11. It may be necessary for you to spread the sides a little, so that the cleats can slip into the notches. Next, temporarily place two more bar clamps across the back to hold the back and sides together. Then, drill and screw the cleats into the notches, see Fig. 11a.

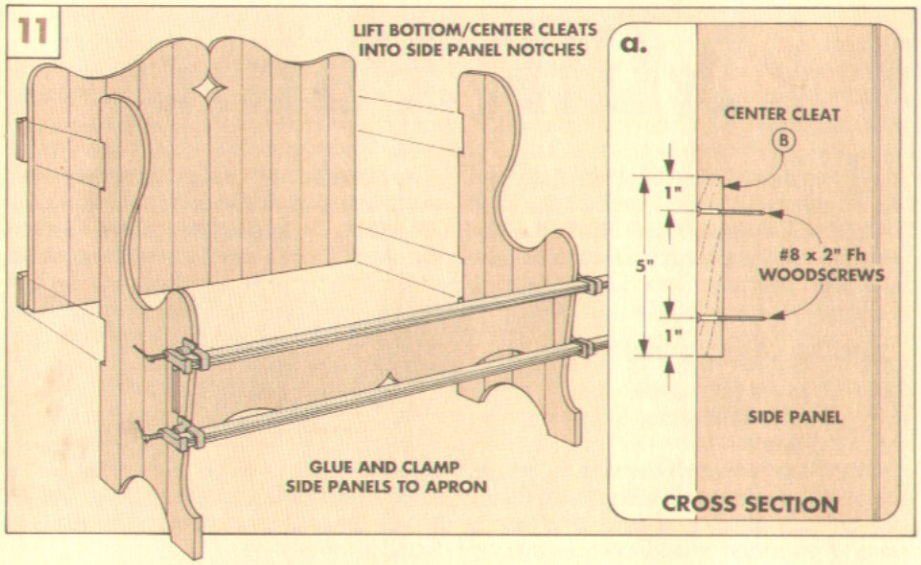

SEAT

Once the glue has dried and the clamps have been removed, the final steps are to build the seat support and the seat.

SEAT SUPPORT. The seat support consists of a frame and center support constructed from 1½" x 1½" boards, see Fig. 12. Begin by cutting two **corner blocks (G)** to a length of 6¾". Then, glue and screw them in place.

Next, cut two **side supports (H)** to fit between the back slats (A) and the corner blocks (G), see Fig. 12. Now, drill and screw the supports in place — but do not use any glue. The sides must be allowed to shrink and swell during changes in humidity.

Now, cut the **front** and **back supports (I)** to length, see Fig. 12. Then, drill and screw them to the apron and back slats.

SEAT. To make the seat, first rip four ¾"-thick boards for the **seat slats (J)** to a width of 5" and slightly over 50" long, see Fig. 13. Then, glue and clamp the boards together for the seat blank.

Once the glue has dried, cut the panel to fit between the sides (50" long). Next, cut a V-groove along all three glue joints. Then, rip the front and back slats to final width, so the V-grooves line up, see Fig. 13.

Next, rout a ½" round-over on the front edge of the seat, see Fig. 13a. Then chamfer the top outside ends, and complete the chamfer with a file, see Fig. 13b.

ATTACHING SEAT. Now, drill and screw the seat supports to the seat, see Fig. 13.

Finally, screw a **center support (K)** to the bottom of the seat between the front and back supports, see Fig. 12.

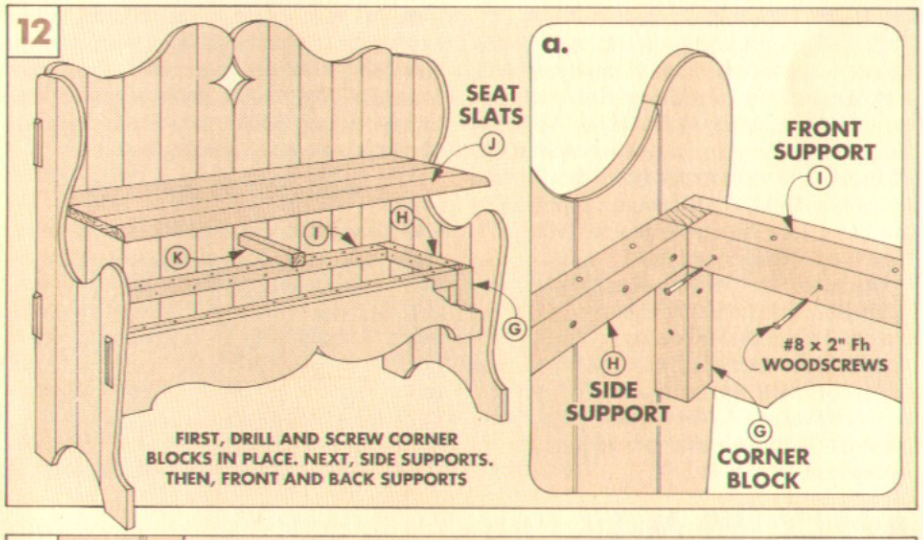

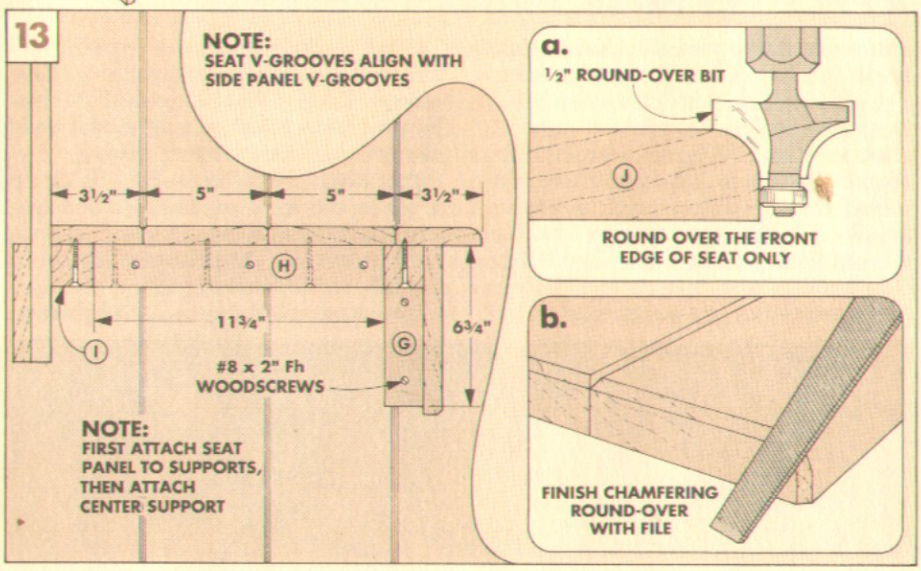

Milk Paint

How do you add 150 years of age and wear to a project such as the High Back Bench shown on page 18? Part of the secret is knowing what finish might have been used on such a bench built that long ago. A good guess would be milk paint.

SOCIAL CLASSES AND COLORS

Before actually getting into how to apply milk paint, it's interesting to know a little about its history.

CITY FOLKS. Much of the wealth in early America was concentrated in and around the cities. The furniture of the rich was largely made of imported woods, such as mahogany, and was usually finished with dyes and shellacs. When a piece was painted, it was usually with a very bright color made from expensive, imported pigments.

"Most people today don't realize that many paints used back then were originally very bright," explains Carey Howlett, a furniture conservator at Colonial Williamsburg. "Over the years the colors would oxidize and fade from exposure to the sun and elements. And the end results of this fading are the colors that many people today mistake the original colors to be."

FARMERS. Out in the country, farmers made their own furniture from whatever was easy and inexpensive to obtain. In rural New England, for example, this was often pine because of the great stands of pine trees that covered the area. And imported shellacs and resins for the finish were out of the question because of their cost.

So many farmers did the best they could to produce paint in the same colors they saw in the city. To do this, they turned to one of the oldest types of paint known to mankind, casein-based paints. And the casein just happened to be right out in the barn — in old Bessie's milk. (Casein is a protein that acts as a binder when used in paints.)

The farmer would mix skimmed milk with a little lime, chalk, and pigment (minerals). Since the ingredients were gathered locally, the colors and shades varied from region to region. And the farmer never could quite duplicate the quality or colors of the paints he found in town.

A DECISION. So the first decision you have to make is, which part of society would have owned your project? And how would it look today? If you want it to look like it's brand new and made for a wealthy patron, then use an oil or water-based paint in a bright color from that time period. If you want the piece to have an aged or country look, then you may want to consider milk paint.

PRE-MIXED POWDER

Okay, so I can run down to the local grocery store and get a quart of 2%, then add a few ingredients to end up with milk paint, right? It's not quite that easy. The necessary pigments and ingredients can be found, but to be honest, I find it a lot more convenient just to buy pre-mixed powder. (For sources of pre-mixed milk paint, see page 31.)

MIXING PRE-MIX. All you have to do with the pre-mix is add together equal parts (by volume) of water and powder. I use a large, clean coffee can to mix in. A vigorous shaking in the can (with the lid on) helps dissolve most of the powder.

To remove any powder clumps that weren't completely dissolved during the shaking, strain the mixture through cheesecloth. (If the clumps are left in the mixture, they will break open during brushing and powder will be smeared across the wood.)

HIGH BACK BENCH. On the painted version of the High Back Bench shown on page 32, I used equal parts of Oyster White and Bayberry mixed together for the color I wanted. (This made one quart of milk paint.)

One of the neat things about using milk paint is you can get different results by using different techniques. You can just paint it on and be through with it, or you can use antiquing techniques to make a project look old and worn. The following steps explain some of these techniques. For the painted version of the High Back Bench, for example, I used the "Aging" technique.

APPLYING MILK PAINT

The easiest way to use milk paint is to simply brush on a couple of coats over bare wood. The end result is a flat, dull color that has a rough texture once it's dried.

PREPARATION. One of the nice things about milk paint is that it doesn't require a primer. In fact, it sticks so well that you want to make darn sure that milk paint is what you want to finish your project with. Because once you've painted it on, about the only way to remove it is to use a power sander.

After you've mixed up a batch of milk paint, wipe the workpiece down with a damp sponge. This prevents the wood from drawing water out of the first coat of paint, and it allows the paint to cure as it's drying.

PAINTING. With the wood still damp, brush on the first coat of milk paint. I use a stiff bristle brush because foam brushes can cause streaking. Then allow the first coat to dry at least four hours.

You can stop with one coat, but if you want to completely cover the wood grain, apply a second coat. Then allow the paint to dry.

POLISHING. If a smoother, glossier surface is desired, lightly rub out the finish with a Scotch-Brite pad. And, to get a really polished surface, buff in a small amount of Danish oil (such as Watco Oil) with a soft rag. Note: The oil will darken the milk paint, so it's a good idea to first test the oil on a sample piece of painted wood or a hidden spot on your project.

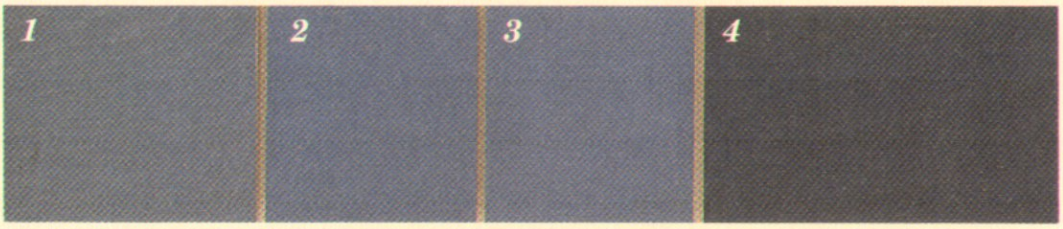

***1.** Apply first coat of paint (Soldier Blue) on bare wood.*
***2.** When the first coat is dry, apply the second coat.*
***3.** Let paint dry overnight, then rub with Scotch-Brite.*
***4.** After rubbing, polish with a light coat of Danish oil.*

AGING

In Colonial days, a couple coats of milk paint were all that was required for a piece of furniture. As the years passed, the paint slowly wore away through daily use. Once the paint was completely gone, the wood became exposed. And the more the piece was used, the more polished the paint and wood became.

AGED LOOK. Normally, furniture acquires an aged look all its own. But the problem with this is it takes many years to develop. To simulate this look, first apply a coat of stain over the bare wood. (I use equal amounts of Minwax Golden Oak stain and Colonial Maple stain mixed together.) Then, once the stain has dried, apply two coats of milk paint.

The next step is to simulate years of daily use. On the High Back Bench shown on page 32, I sanded areas that would have been rubbed on, sat on, and even scuffed with boots and shoes.

Using 180 grit sandpaper, lightly sand the selected areas down to the stain — but don't sand through the stain to expose the bare wood. (If you do happen to sand through the stain, just touch up the area with more stain.)

POLISH. To remove the rough texture and flat, dull appearance of the milk paint finish, rub out the entire piece with a Scotch-Brite pad. Then buff in a coat of Danish oil to darken and polish the finish.

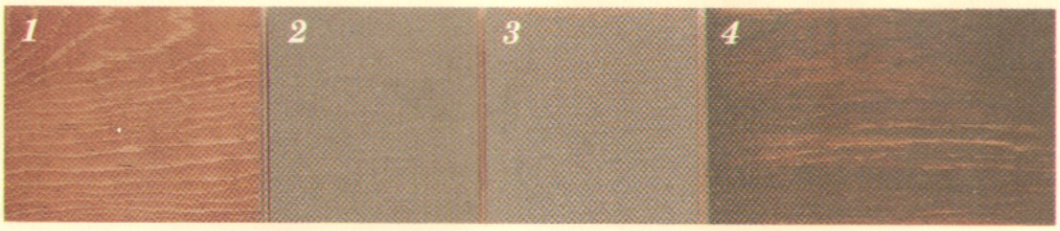

1. Apply one coat of stain over bare wood.
2. Apply two coats of paint (Oyster White/Bayberry mix).
3. Sand through paint to expose stained wood.
4. After sanding, rub out and polish with Danish oil.

LAYERING PAINT

When a piece of furniture required a new coat of milk paint, sometimes the original color was painted over with a different color. Eventually the second color would become as worn and faded as the first. And if the top layer of paint was dinged or scratched, the underlying layer would show through.

DINGS AND SCRATCHES. When layering milk paint, I like to first distress the bare wood a little. This helps give the piece a little "natural" wear.

To do this, use the edge of a small file to create dings and scratches wherever they may have normally occurred. At first while you're doing this, there's a tendency to be cautious, but once you get started it's easy to get carried away — don't. When you're through distressing, stain the entire piece to simulate aged wood. (I use the same stain mixture as above.)

LAYERING. Once the stain is dry, apply the first layer of milk paint. When the first color is dry, apply the second color. (You can layer as many colors as you want.)

After the paint completely dries, rub out the entire piece with a Scotch-Brite pad to remove the paint's rough texture. Then, create wear spots using 180 grit sandpaper to expose the bottom layer of milk paint and the stained wood.

POLISH. To age the piece a bit further, buff in a thin coat of Danish oil to polish and darken the finish.

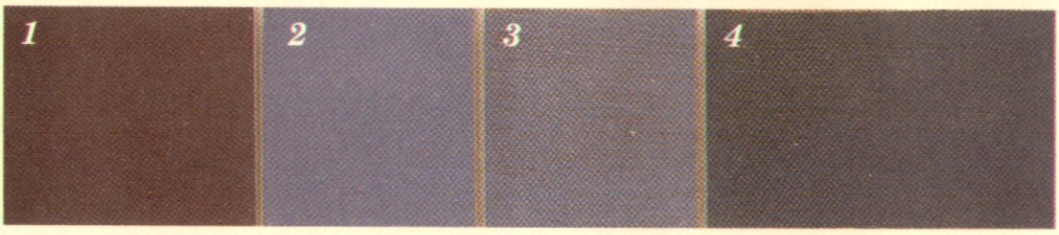

1. Apply first coat of paint (Barn Red) on stained wood.
2. Apply second coat (Soldier Blue) over first color.
3. Sand through top color to expose bottom color.
4. After sanding, polish with a light coat of Danish oil.

ANTIQUE CRACKLE FINISH

When furniture was exposed to the sun or elements, sometimes the milk paint would dry out and "alligator."

CRACKLE FINISH. To simulate this look, a special Antique Crackle Finish (crackle gel) is used. (For sources, see page 31.)

First, I stained the bare wood. Note: Only apply stain if you're going to create wear spots later. (I used the same stain used in the "Aging" technique above.) Then, apply the first coat of milk paint.

Once you've allowed the milk paint to thoroughly dry, brush the crackle gel on the paint. Note: You may want to simulate where sunlight took its toll on the finish by only applying the crackle gel on those places that may have been directly hit by the sunlight.

Once the crackle gel has dried for two hours, apply the next color of milk paint over the top. It's important not to brush the second coat of milk paint too much on top of the crackle gel — if overbrushing occurs, then the paint and crackle gel will mix together and form a messy sludge. Simply load the brush up with paint, then apply the paint over the crackle gel in one smooth stroke. After the paint is applied, the "alligatoring" (cracks) will appear as the paint dries.

POLISH. When the final coat of paint is dry, rub out the entire piece with a Scotch-Brite pad. Then, create wear spots (if desired) with 180 grit sandpaper. Finally, buff in Danish oil to polish and darken the finish.

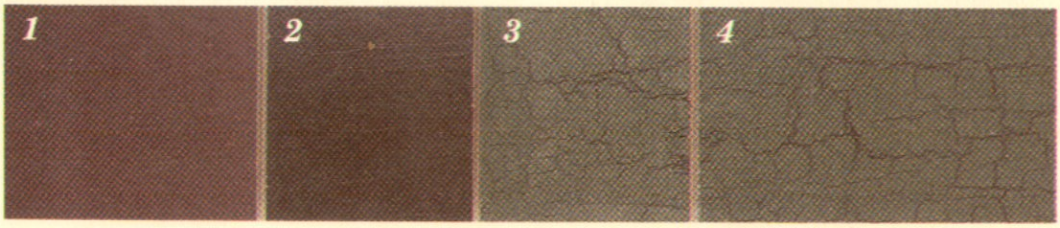

1. Apply first coat of paint (Barn Red) on stained wood.
2. When the first coat is dry, apply crackle gel.
3. Apply second coat of paint (Oyster White/Bayberry mix).
4. Finally, polish with a light coat of Danish oil.

Shop-Made Clamps

Rubber bands, cams, and even furniture levelers. Four of our readers share their ideas for problem-solving clamps.

RUBBER BAND CLAMP

■ Our favorite light-duty clamp was sent in by **Jim Tite** of Fayetteville, Arkansas. The clamping pressure is provided by something found in every home — a rubber band. Jim says he uses these clamps on small projects, such as the 3x5 file boxes he makes. "When you're using yellow glue on nicely jointed edges, a rubber band provides ample pressure for the short time needed for the glue to set up."

The clamp is made from two small blocks of wood, two 5/16" dowels, and a strong rubber band, see Fig. 1. The blocks slide along the length of the dowels. And since the blocks tend to cant out under pressure, the jaws of the blocks are beveled.

A single rubber band provides enough clamping pressure for most jobs. The size you need depends on the size of the project being clamped and how much pressure you want. If you need a lot of pressure, use two rubber bands. To keep the band from slipping under pressure, cut a shallow notch on the outside of each block, see Fig. 1a.

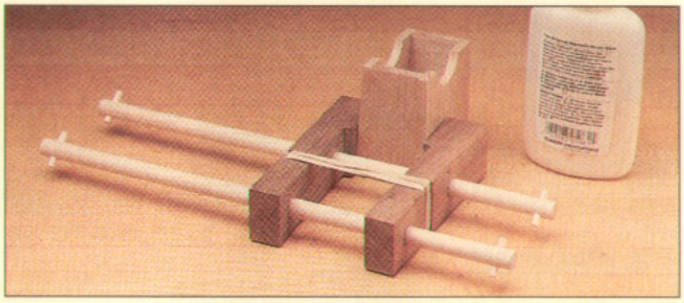

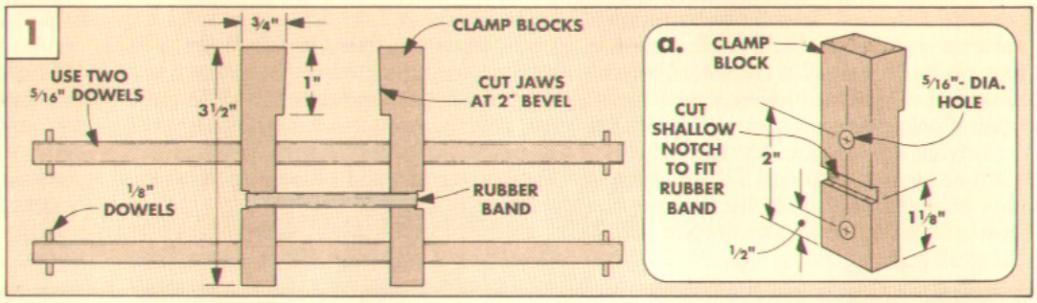

CAM CLAMP

■ This bar clamp designed by **Sam Nichols** of Wittman, Arizona uses a cam to provide clamping pressure, see photo. The clamp consists of only three parts (plus hardware): an arm, an adjustable stop block, and the cam. (Note: A pattern for a cam that can be used on this clamp is shown on the opposite page.)

Cams exert pressure because the pivot point in the wide part of the cam is positioned off-center. As the cam is rotated, pressure is applied. In this case, pressure is applied against the stock being glued-up, since it's between the cam and the fixed stop block.

The stop block is adjustable two ways. First, it can be positioned in any one of a number of holes in the arm, so the clamp accommodates panels of varying widths. And, for fine adjustment, the block itself is adjustable — the hole for the bolt is carefully located off-center, see Fig. 2. This way each edge of the block is slightly closer to or farther from the cam. By rotating the block you can slightly increase or decrease the distance between the block and cam.

This makes glue-up a little less stressful. If you find the cam doesn't exert quite enough pressure against the stock, you can make a slight adjustment by just rotating the block to the next tighter position.

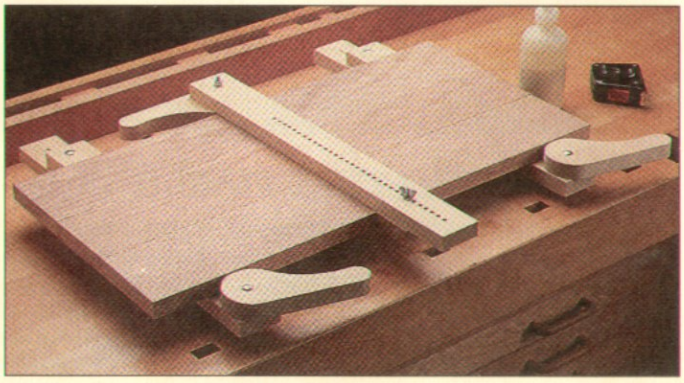

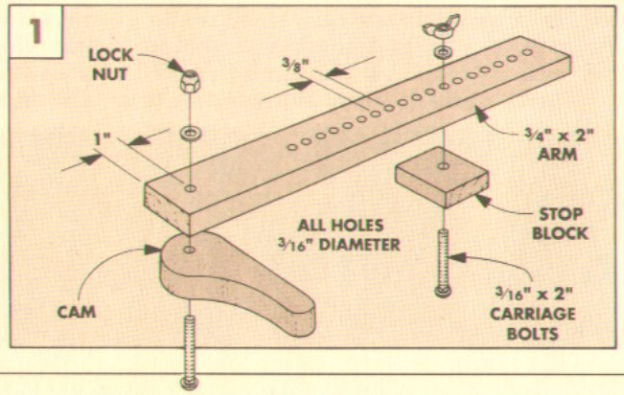

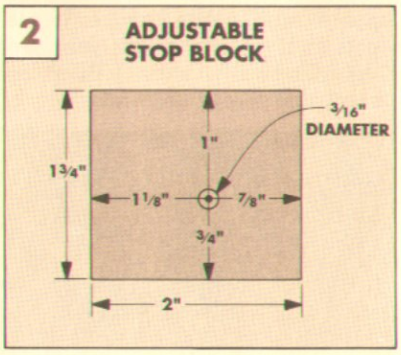

MULTI-CAM CLAMP

■ When the time comes that you want to use a less-than-flat board (or boards) in a panel, this multi-cam clamp from **Howard Simpkins** of Northridge, California may be a big help, see Fig. 1.

That's because it not only applies pressure for edge-gluing panels. It also uses "cam action" to help flatten bowed or twisted boards into a flat panel.

This is not a delicate clamp. Howard uses 2x4's for the arms, and hardwood for the cams. But despite its hefty size, it can make fine adjustments in the alignment of boards being glued-up.

ARMS AND CAMS. The arms of the multi-cam clamp are held together around a glued-up panel with lightweight bar clamps, see photo. The dowels sticking out both sides of the top arm are used as pivot points for the cams that flatten or level the stock in the clamp, see Fig. 1.

An end cam applies the pressure for edge-gluing. This cam rotates around a ½" carriage bolt at its pivot point. The bolt fits into holes bored at one end of the top and bottom arms, see Fig. 1. (Note: The cam pattern below can be used to make both edge-gluing and leveling cams.)

STOP BLOCK. A stop block is used as a fixed point to work against the cam for edge-gluing, But the block in this clamp is not bolted or pegged — instead, it gets clamped in place between the arms along with the stock being glued up, see photo.

USING THE CLAMP. Two multi-cam clamps provide enough pressure to glue up a panel. To use a clamp, load the boards to be glued between the arms, and against the end cam. Then tighten a bar clamp on the arms over the stop block.

Next, rotate the end cam to force the edges of the boards together. Then tighten the wing nut on the bolt over the end cam.

To flatten the panel, place cams on the dowels over the uneven areas, and apply pressure to force the high spots down against the bottom arm.

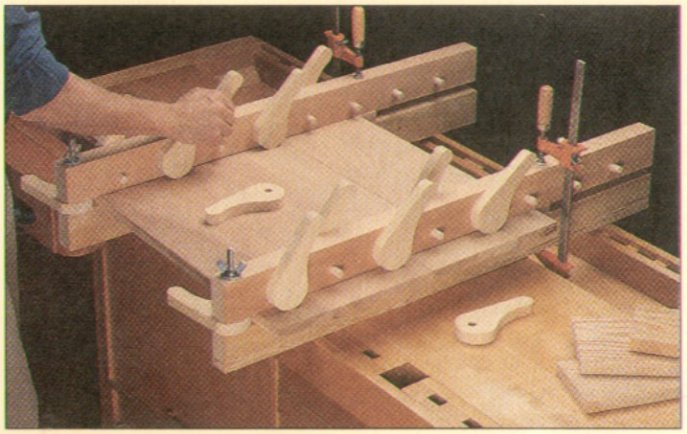

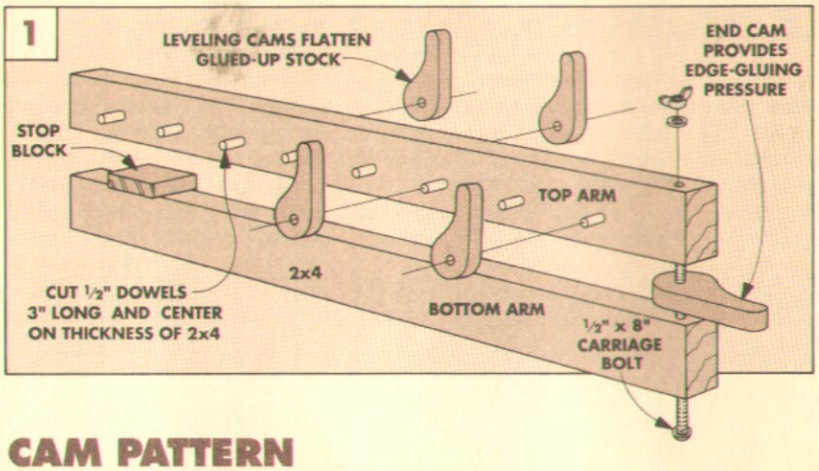

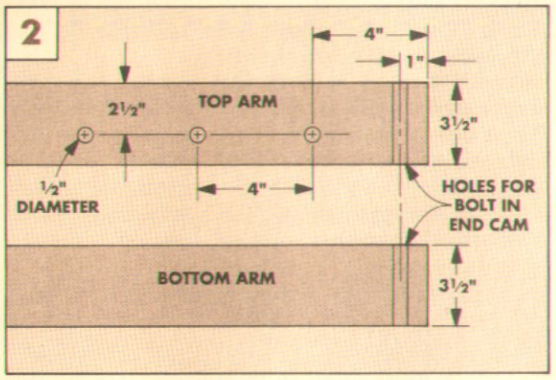

CAM PATTERN

■ For a cam to work properly, it must exert pressure *evenly* as it's rotated against a workpiece. Designing a cam to do this turned out to be trickier than we expected. So here's a cam design that will work well on both the single-cam clamp on the opposite page and the multi-cam clamp on this page.

To make a template, you'll need to re-draw the pattern using the dimensions in the drawing. (I made one cam and then used it as a template.) Or, if you have a copy center or print shop nearby, have the drawing reproduced at 150%.

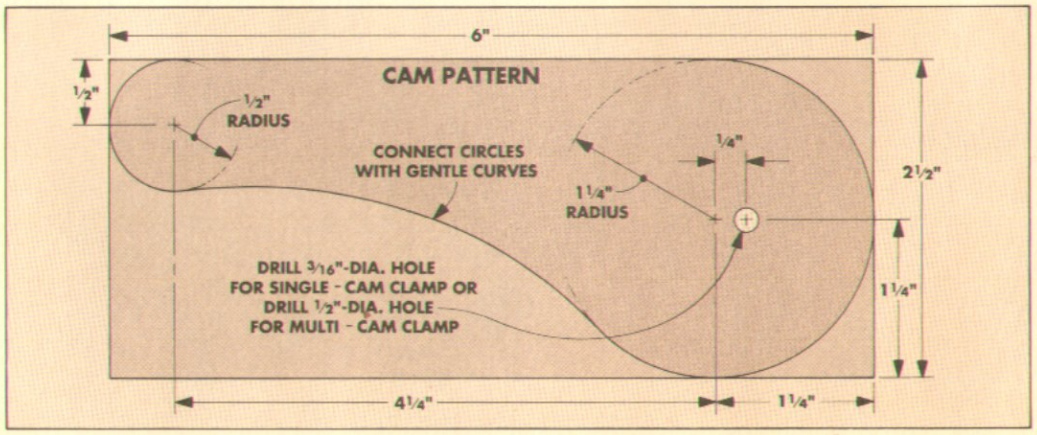

$100 CONTEST

FINISHING TIPS

Applying a finish may be the last step in a project, but it's one of the most important. The quality of a finish can "make-or-break" a project. If you have a finishing tip or technique that assures the success of your projects, tell us about it.

We'll publish the best finishing tips and techniques in an upcoming issue of *Woodsmith*. Winners will receive $100 and a *Woodsmith* Master Try Square. Duplicate or similar entries will be considered in the order we receive them. Send your ideas (postmarked no later than May 15, 1992) to Shop Tips Contest, *Woodsmith*, 2200 Grand Ave., Des Moines, Iowa 50312.

VERTICAL CLAMPS

■ I've always liked the idea of being able to stand a panel up out of the way while waiting for the glue to dry. It clears the bench so other work can be done, and it allows you to carefully examine both sides of a panel for flatness and glue squeeze-out.

This sort of clamping system is available commercially, but it's expensive. So I was intrigued by the vertical clamp sent in by **Bill Schmidt** of Oakdale, California — and especially by his use of a furniture leveler to apply clamping pressure.

The leveler is mounted at the top of two long legs. Feet attached to the other end of the legs allow the clamp to stand up. In between the feet and leveler is an adjustable stop block that can be bolted to the legs through holes drilled in the legs.

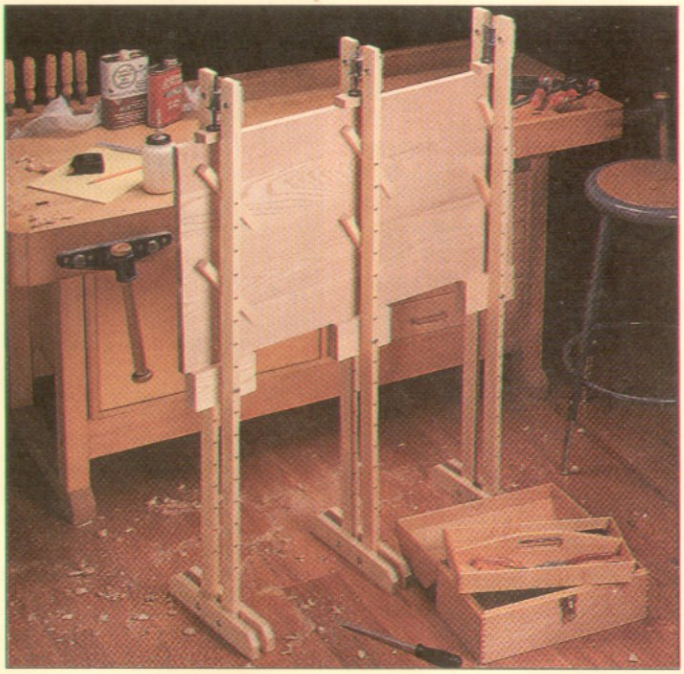

HOW IT WORKS. The boards of the panel to be glued up are placed in the gap between the legs, and on top of the stop block. Then the furniture leveler is tightened against the top edge of the panel.

For most applications, the 1½" gap between the legs makes it easy to insert the boards to be glued. And if the boards don't make up a flat panel, the gap allows room enough for wedges to be inserted against the boards and one leg, see photo.

BUILDING THE CLAMP. To build the vertical clamp, first cut 1x2 stock for the legs and feet to length, see Fig. 1. (The legs on Bill's clamps are 48" long.)

Then drill holes for the adjustable stop block 2" apart down the edges of the legs, see Fig. 1c. Lay out the locations for the holes in both legs at the same time. This way they'll line up once the clamp is assembled.

FURNITURE LEVELER. To mount the furniture leveler, first bolt a ¼" Masonite plate to the top of the legs, see Fig. 1. Then bolt the leveler to the plate. (The space between the legs must be at least as wide as the U-shaped bracket, see Fig. 2a.)

Finally, drill matching holes in the feet and the legs, see Fig. 1d. Then bolt them together.

USING THE CLAMP. To use the vertical clamp, first bolt the adjustable stop block between the legs. Position it so the stock being glued up will fit between the leveler and the stop block with about an inch to spare. Note: This isn't too critical since the leveler has about a 2" adjustment span, see Fig. 1a.

Next, set the boards to be glued up between the legs, and on top of the stop block. Then tighten the leveler against the panel. (If you need to flatten the panel, drive wedges between the legs and one side of the panel.)

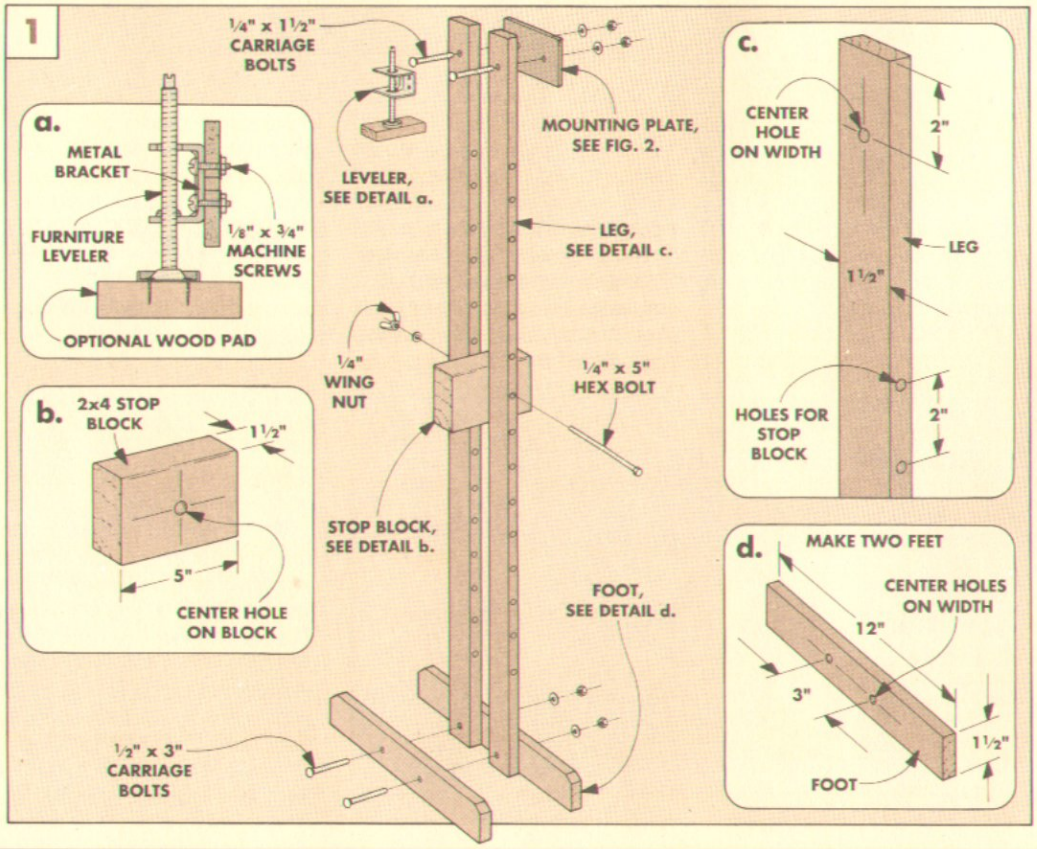

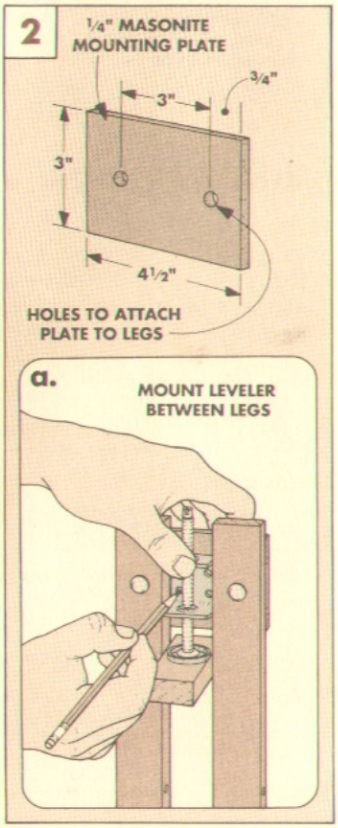

PVC Clamp

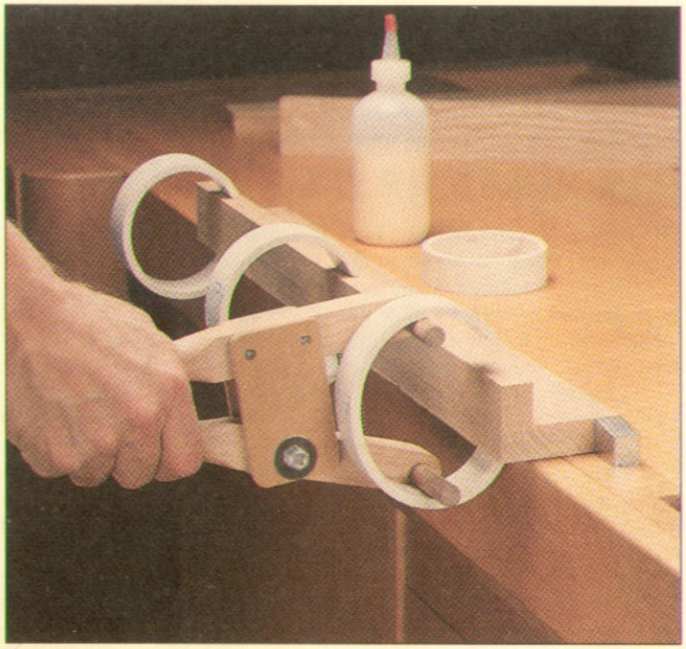

■ Among the entries sent in for the shop-made clamp contest (beginning on page 26), I found a simple, little package. When I opened it, all it contained was a small section of PVC pipe with a slit in one side.

It had me stumped. Then I read the letter from **Thomas Whalen** of Cohoes, New York. He said that since we were collecting plans for shop-made clamps, we ought to see his.

Thomas uses these small sections of PVC pipe as "pinchers" — clamps that put pressure on a small spot. It's a great idea for a clamp. Cheap, easy to make, and it works surprisingly well. PVC isn't brittle like some plastics. It will flex and return to its original shape. (But you can overdo it and stretch it too far. More on this later.)

You can buy PVC pipe at any home center. But rather than buy PVC pipe, you might be able to find some. There always seems to be discarded pipe around construction sites.

I think the most useful size clamps are made from 4"-diameter pipe, the size used for the waste stack in most new houses.

When using the clamps, I noticed only one major problem. The PVC can be difficult to open enough to fit over thick workpieces. So I designed a spreader to solve that problem, see below.

MAKING THE SPREADER. It works just like a span wrench, the type of wrench used to install snap rings. One of the handles pivots and the other is fixed to side plates made from Masonite, see Figs. 1 and 2. Dowels mounted at the end of the handles fit inside the PVC clamp. So by squeezing the handles together, the dowels (and the jaws of the clamp) are spread apart.

I used an expansion spring to close the spreader, see Figs. 1 and 2. It makes the spreader a lot handier to use.

MAKING THE CLAMP. To make a PVC clamp, first cut a slice of pipe, see Fig. 3. An inch is wide enough for most applications. If you need a stronger clamp, cut a wider section. PVC pipe can be cut with a hand saw or hack saw.

Then cut through the ring to create the "jaws". To avoid marring the workpiece, smooth the jaws with a file, see Fig. 3a.

ONE CAUTION. PVC pipe makes good clamps because the material has "memory" — after you spread it apart, it returns to its original shape. But you can stretch PVC pipe too far and make it lose its memory (and also its holding ability).

To avoid this problem when gluing thick stock, cut a wide opening. By removing an inch of material, the clamp will retain its memory, even if spread open 3".

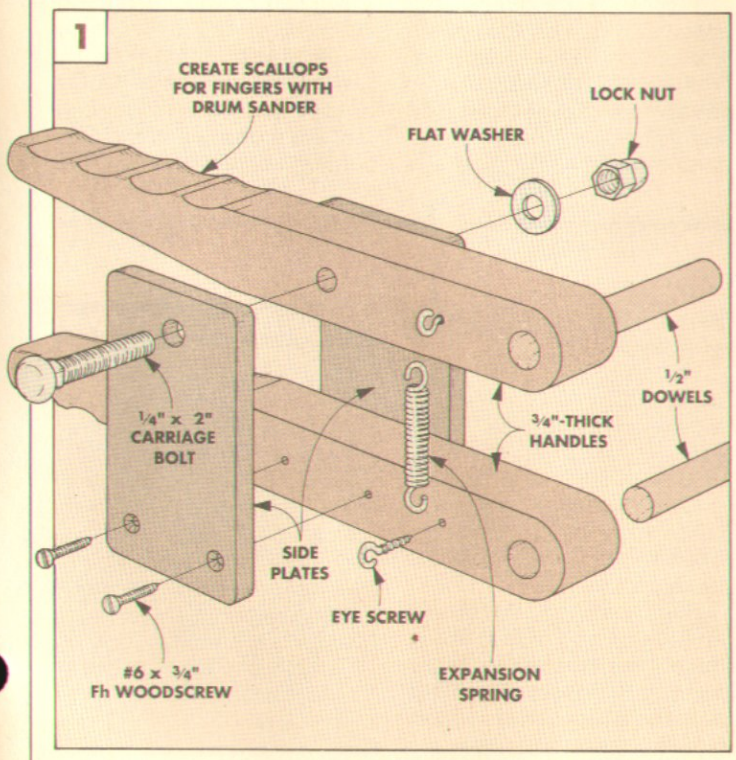

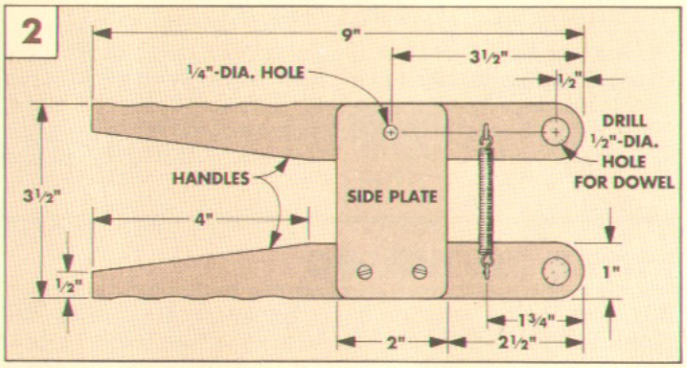

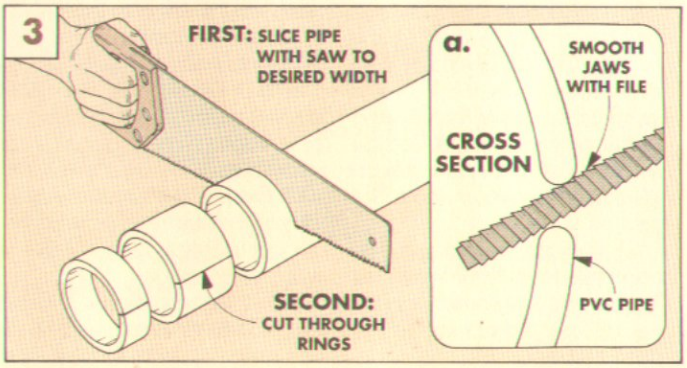

Talking Shop

115 VOLTS OR 230 VOLTS?

■ *The owner's manual that came with my 10" table saw explains how to modify the motor so it can run off either 115 volts or 230 volts. I was wondering if there's an advantage of one voltage over the other?*

Joe Dolinaj
Cedar Rapids, Iowa

"An electric motor with two voltage capabilities will perform the same regardless which voltage is used," says Tony Lee, Senior Application Engineer with Marathon Electric. That is, "the amount of electricity the motor consumes, the amount of power the motor delivers to the saw blade, and the heat build-up in the motor will be the same."

220 LINE. But Tony pointed out that, "There is one advantage to having a 220 *supply* line. A 220 line can deliver twice the current of a 110 volt line, when the same gauge wire is used for both." (A 220 circuit uses two 110 supply lines which share the current load to the motor.) "This increased availability of current allows for larger motors to be used in the shop. And it also reduces the chance that a fuse will blow unnecessarily."

HOME WIRING. Residential property in the U.S. is wired for 110/220. About the only thing 220 is used for is electric clothes dryers and stoves. Many 110 volt lines use 14 gauge wire, which is rated to handle 15 amps of current. But many large stationary power tools (like those used in factories or cabinet shops) can draw more than 15 amps. So they're not readily adaptable to 110 volt circuits.

But, by scaling down a larger machine with a smaller motor, a professional power tool can be used in the home shop without the expense of rewiring.

BLOWING FUSES. Sometimes when a motor is powered from a 110 volt line, it will blow a fuse (or trip a circuit breaker). There are a couple reasons for this.

Motors normally pull more current through the power line during start up and also when the motor becomes bogged down under a load.

If the current surge exceeds the circuit's rating, the fuse will blow. A fuse (or circuit breaker) is designed to handle short, momentary surges above its current rating. But, if the current surge is too great, for too long, the fuse will blow.

PREVENTING INTERRUPTIONS. If you have a 220 volt line available in your shop, you should use it. Then it's less likely you'll blow a fuse at start up or during short periods when the saw bogs down. Converting to 220 *doesn't* mean you can overload your motor without damaging the motor. But, this will eliminate trips to the distribution panel to replace a fuse or reset a breaker.

Wait a minute. You've been talking about 110/220 volts. But my owner's manual says my motor requires 115/230 volts. Is this a problem?

The 115/230 volts listed in your owner's manual is actually the *average* amount of voltage the motor requires. This average voltage is within a *range* that your motor can safely run on.

NOMINAL VOLTAGE. National standards require that power companies deliver a nominal voltage of 240 volts to your breaker box. But they may actually deliver *more* than 240 volts to make up for power line losses and voltage drops along the way. The delivered voltage is split inside the distribution panel to two lines of equal voltage. This means the voltage range your motor requires is delivered — whether it's 110 or 115 volts.

Can I run a 3hp motor on a 110 volt circuit?

Larger motors require additional current. And the only way to get the extra current is to use a 220 volt circuit.

HORSEPOWER. Many electric motors (used in stationary power tools) rated below 2hp are designed to be wired with either 110 or 220 volts. Motors rated above 2hp are usually designed for 220 only because of their current needs. So it's a good idea to keep these restrictions in mind when shopping for a power tool.

SAFETY. One last thing. Most motors that can be powered by 110 or 220 volts come from the factory set up for 110 volts. If you decide to switch to 220 volts, follow the instructions in the owner's manual very carefully (or hire a licensed electrician) before running power to the tool.

MORE ON WD-40

■ In answering a question in *Woodsmith* No. 78 about how to prevent rust on shop tools, I said that WD-40 contains silicone. But I was wrong — the fact is it doesn't. "WD-40 does not contain silicone," wrote WD-40's Technical Director, Ray Miles.

After receiving Ray's letter, I gave him a call. "It's always been a petroleum-based product," he explained to me.

Apparently it's a common misconception that WD-40 contains silicone, and Ray spends a great deal of time explaining to the public that it doesn't.

He says the key to using WD-40 safely on shop tools is to spray it on, then buff it out. This procedure will leave a very thin, invisible film of protection on the metal, which is all a tool needs.

If WD-40 is sprayed on a tool and not wiped off, it can stain the bare wood (of your project) if the wood comes in contact with the tool. But if WD-40 comes in contact with a thoroughly cured finish (according to Ray), the finish won't be harmed.

Most woodworkers I know use WD-40 to clean rusty tools and quiet squeaky hinges. And some even protect their cast iron table tops with it.

But I personally avoid exposing the bare wood or finishes in my projects to *any* kind of lubricant — petroleum-based or otherwise. The problem is these products are not designed to be used in conjuction with normal wood finishes. The results can be unpredictable.

But if you do use WD-40 on a tool, thoroughly buff it out so there's only an invisible film remaining. And if you spray WD-40 near bare wood or a finished surface, first mask off that area.

PROBLEM? QUESTION?

Solving a problem (or avoiding one in the first place) is part of every project. But the best solutions aren't always obvious — they often come from one who's faced the problem before.

If you have a problem, solution, question, or even a gripe, maybe we (or another reader) can help. Just write to *Woodsmith*, Talking Shop, 2200 Grand Avenue, Des Moines, Iowa 50312.

Sources

COFFEE/END TABLES

You will need fourteen No. 8 x 1¼" flathead woodscrews for the Coffee Table (page 6) and sixteen for the End Table (page 12). These screws can be found at most hardware stores or ordered through **Woodsmith Project Supplies** (see "Wood Screws" column at right).

FINISH. I stained the tables with a homemade stain made by mixing one teaspoon of burnt umber artists' oil color into a quart of boiled linseed oil. The linseed oil is available at most paint and home centers. Artists' colors can be found at art supply stores or through **Woodsmith Project Supplies** (see below).

Then I wiped on a coat of General Finishes Sealacell as a sealer and two coats of Royal Finish (satin). For more durability, use Arm-R-Seal.

Artist Oil Color
4001-150 Burnt Umber, 1.25 fl. oz. tube $4.95

Sealacell Sealer (Clear)
4003-501 ..... $5.95 pint
4003-601 ..... $9.50 quart

Royal Finish Oil and Urethane Top Coat (Satin)
4003-502 ..... $6.45 pint
4003-602 ..... $9.95 quart

Arm-R-Seal Oil and Urethane Top Coat (Satin)
4003-520 ..... $6.45 pint
4003-620 ..... $9.95 quart

HIGH BACK BENCH

The only hardware needed for the High Back Bench (page 18) are (46) No. 8 x 1¼" and (56) No. 8 x 2" flathead woodscrews. These are available at hardware stores or can be ordered through **Woodsmith Project Supplies** (see next column).

PATTERNS. We're also offering full-size paper patterns for the scrolled shapes on the Bench.

Bench Patterns
780-200 Full-Size High-Back Bench Patterns $7.95

FINISH. We built two High Back Benches. The bench on page 32 is finished with Milk Paint (see far right column).

The Bench shown on page 18 was stained with a mixture of Minwax's Golden Oak and Colonial Maple stain. These stains are available at many home centers and through some of the sources listed below.

Before applying the stain, we brushed on a coat of McCloskey's Stain Controller & Wood Sealer to help the wood absorb the stain evenly. We finished with two coats of General Finishes Royal Finish. **Woodsmith Project Supplies** is offering the Royal Finish (see column at left) and the Stain Controller (below).

Stain Controller
4003-321 McCloskey's Stain Controller & Sealer .... $5.95 pint

WOOD SCREWS

Woodsmith Project Supplies is offering brass and zinc-plated screws. If your project might come in contact with moisture, we recommend brass screws.

The brass screws all have a Phillips drive. The zinc-plated screws are Phillips or Recex drive. Recex screws can be driven with a Phillips or a square drive bit or screwdriver. (Note: We're also offering a square drive bit for an electric drill.)

Note: We cannot mix screw types or sizes in a bag.

Brass Phillips Screws
• No. 8 x 1¼", Flathead
769-215 (Bag of 25) $2.95
769-210 (Bag of 100) $8.95
• No. 8 x 2", Flathead
769-225 (Bag of 25) $3.95
769-220 (Bag of 100) $12.95

Zinc-Plated Phillips Screws
• No. 8 x 1¼", Flathead
769-235 (Bag of 25) $1.00
769-230 (Bag of 100) $2.95
• No. 8 x 2", Flathead
769-245 (Bag of 25) $1.25
769-240 (Bag of 100) $3.95

Zinc-Plated Recex Screws
• No. 8 x 1¼", Flathead
769-255 (Bag of 25) $1.25
769-250 (Bag of 100) $3.25
• No. 8 x 2", Flathead
769-265 (Bag of 25) $1.45
769-260 (Bag of 100) $4.25

Square Drive Bit
5503-314 Sq. Dr. Bit $1.25

MILK PAINT

On pages 24 and 25 we talked about milk paint and some techniques for "aging" a project. **Woodsmith Project Supplies** is offering milk paint in a variety of colors and Crackle Finish. Each 6 oz. bag of powder will mix up a pint of milk paint.

Milk Paint (6 oz. Bags)
4001-342 Bayberry $7.95
4001-343 Oyster White .. $7.95
4001-344 Barn Red $7.95
4001-345 Soldier Blue ... $7.95
4001-346 Lex. Green $7.95

Antique Crackle Finish
4001-340 Crackle ... $19.95 qt.

SHARPENING

On page 14 we discussed sharpening. **Woodsmith Project Supplies** is offering the aluminum oxide grinding wheel and 1000/6000 grit waterstone used in the *Woodsmith* shop.

Grinding Wheel
5503-206 60-Grit Al. Oxide Wheel, 6" Dia., ¾" Wide, ⅝" Bore, Includes ½" Bushing $29.95

Waterstone
5004-101 1000/6000 Grit Waterstone $22.95

FURNITURE LEVELERS

To make the shop-built clamps on page 28 you will need furniture levelers (one per clamp).

Furniture Levelers
1008-303 Leveler ..... $3.95 ea.

ORDER INFORMATION

BY MAIL

To order by mail, use the form enclosed with a current issue. The order form includes information on handling and shipping charges, and sales tax. Send your mail order to:

Woodsmith Project Supplies
P.O. Box 10350
Des Moines, IA 50306

BY PHONE

For fastest service use our Toll Free order line. Open Monday through Friday, 8:00 AM to 5:00 PM Central Time.

Before calling, have your VISA, MasterCard, or Discover Card ready.

1-800-444-7002

Note: Prices subject to change after June, 1992.

MAIL ORDER SOURCES

Similar hardware and supplies may be found in the following catalogs. Please call each company for a catalog or information.

Constantine's
800–223–8087
Screws, Milk Paint, Sharpening Supplies, Furniture Levelers

Craftsman Wood Service
800–543–9367
Minwax Finishes

Garrett Wade
800–221–2942
Sharpening Supplies

Highland Hardware
800–241–6748
Milk Paint, Sharpening Supplies

The Japan Woodworker
800–537–7820
Waterstones

The Old-Fashioned Milk Paint Company
508–448–6336
Milk Paint, Antique Crackle Finish

Shopsmith
800–543–7586
Sharpening Supplies

Van Dyke's
800–843–3320
Artist's Oil, Screws, Milk Paint

Trend-Lines
800–767–9999
Screws, Waterstones

Woodcraft
800–225–1153
Screws, Sharpening Supplies, Levelers

The Woodworkers' Store
612–428–2199
General Finishes, Stain Controller, Minwax, Screws, Waterstones

Woodworker's Supply
800–645–9292
Sharpening Sup., Screws

Final Details

High Back Bench

► *This country bench is a good example of the practical craftsmanship that went into woodworking projects two hundred years ago.*

By cutting graceful patterns on the bench, the early woodworker transformed a collection of boards into an eye-catching piece of furniture.

A bench like this was often built from pine and finished with homemade milk paint. Using a special aging technique, we gave our bench the look of a well-worn antique.

Coffee Table

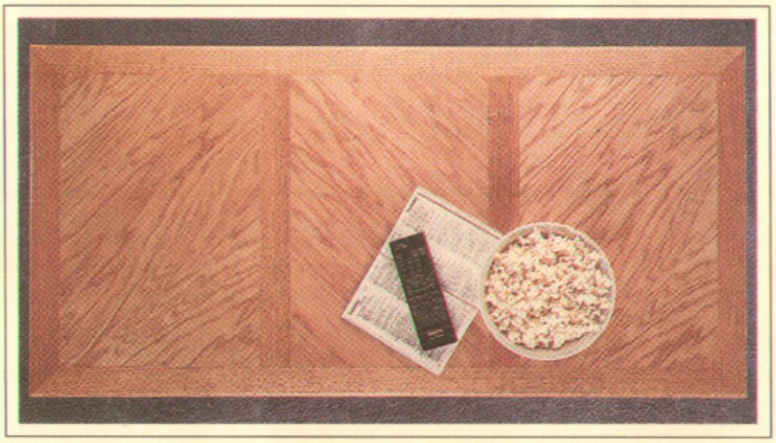

▲ *An oak frame surrounds the plywood panels in the top of this Coffee Table. Installing the panels with the grain at an angle looks unique, and makes for a challenging project.*

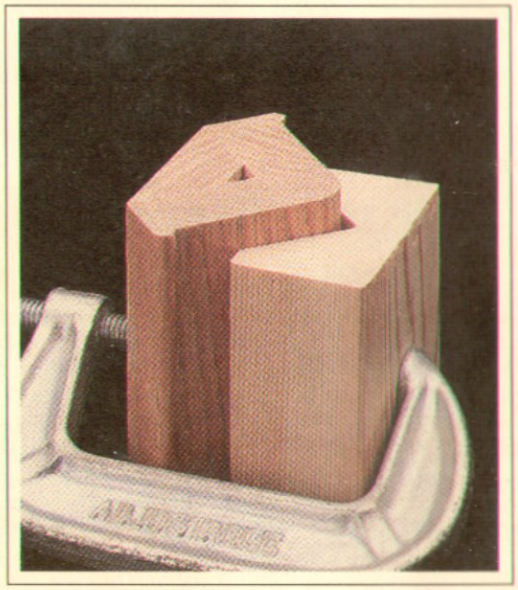

► *The legs of the Coffee Table are built from three pieces of oak that form a triangle. Beading strips are attached, then the leg is glued and clamped with a shop-made V-block.*